Classic Sideboard • Varnishing Techniques
Sturdy Saw Horses • Twin Mortise & Tenon • Veneering

Woodsmith®

Vol. 17 / No. 97

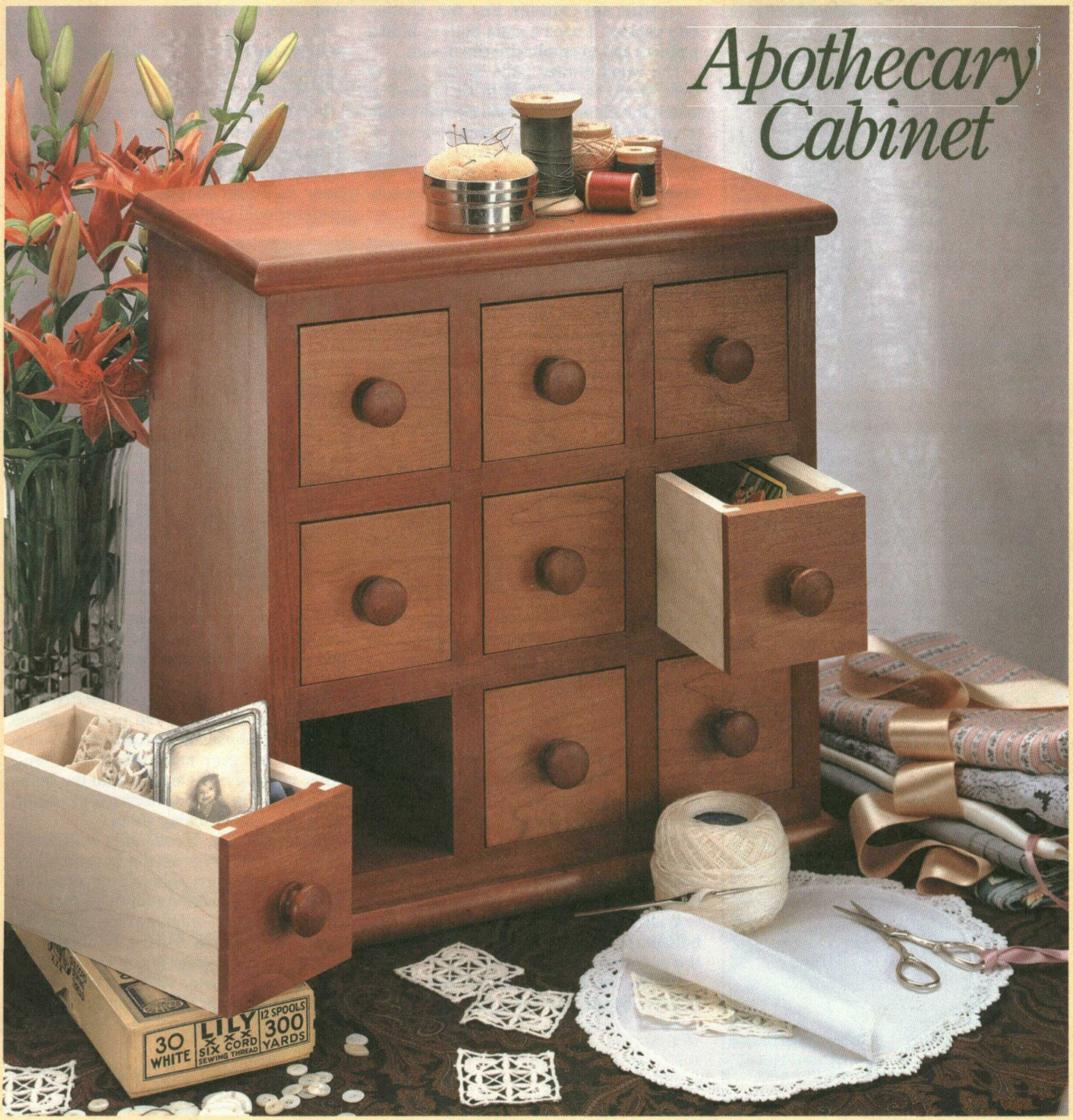

Apothecary Cabinet

No. 97 February, 1995

Woodsmith®

Editor Donald B. Peschke
Executive Editor Douglas L. Hicks
Managing Editor Terry J. Strohman
Assistant Editors James M. Dolan, Jonathan Garbison, Mark A Williams

Creative Director Ted Kralicek
Senior Illustrators David Kreyling, Cinda Shambaugh, Dirk Ver Steeg
Illustrator Mark Higdon
Photographer Crayola England
Electronic Graphics Chris Glowacki
Design Director Ken Munkel
Senior Designer Kent Welsh
Shop Manager Steve Curds
Shop Asst./Facilities Steve Johnson

Circulation Director Liz Bredeson
Subscription Manager Sandy Baum
Direct Mail Manager Troy J. Dowell
Newsstand Sales Kent A. Buckton
Circulation Analyst Shane S. Francis

PUBLISHING SERVICES
Mgr: Gordon Gaippe • *Graph. Artist:* Cheryl L. Cynor

CORPORATE SERVICES
Planning Director: Jon Macarthy • *Controller:* Robin Hutchinson • *Account:* Laura Thomas • *Bookkeeping:* Julie Greenlee • *Production Mgr.:* Carol Quijano • *Info. Serv. Mgr.:* Joyce Moore • *Elec. Pub. Coord.:* Douglas M. Lidster • *Applic. Spec.:* Linda Morrow • *Sup. Asst:* Nick Thielen • *Admin. Assistants:* Cheryl A. Scott, Julia Fish • *Receptionist:* Jeanne Johnson • *Build. Maint.:* Ken Griffith

WOODSMITH MAIL ORDER
Art Dir.: Cindy Jackson • *Catalog Prod. Mgr.:* Bob Baker • *Inv. Control/Prod. Mgr.:* Mark Mattiussi • *Proj. Supplies:* Linda Jones • *Tech. Supp:* Jeff Janes

CUSTOMER SERVICE
Supervisor: Jennie Enos • *Customer Service Reps.:* Jennifer Murphy, Joy Krause, Sara Kono, Anna Cox, Lonnie Algreen, Karla Cronin

SHIPPING DEPARTMENT
Supr: Nancy Johnson • *Fulfillment:* Gloria Sheehan, Chuck Carlson, Sylvia Carey, Larry Prine

WOODSMITH STORE
Manager: Dave Larson • *Assistant Manager:* Paul Schneider • *Sales Staff:* Wendell Stone, Pat Lowery • *Office Manager:* Vicki Edwards

Woodsmith® (ISSN 0164-4114) is published bimonthly (Feb., Apr., June. Aug., Oct., Dec.) by Woodsmith Corp., 2200 Grand, Des Moines, IA 50312.
Woodsmith® is a registered trademark of Woodsmith Corp. Copyright© 1995 Woodsmith Corporation. All rights reserved.
Subscriptions: Single copy: $3.95. One year subscription (6 issues), $19.95. Two years (12 issues), $35.95. (Canada/Foreign add $5 per year. U.S. funds.)
Second Class Postage Paid at Des Moines, IA and at additional offices.
Postmaster: Send change of address to *Woodsmith*, Box 10718. Des Moines, IA 50350.
Subscription Questions? Call **1-800-333-5075**, 8:00 am to 5:00 pm, Central Time, weekdays.
E-Mail. Prodigy: EDJE97A. CompuServe: 75330,2301, Internet 75330.2301@compuserve.com., America Online: Donpeschke.
Printed in U.S.A.

E D I T O R ' S C O L U M N

Sawdust

Stains are often used only to hide a problem or "even out" the color of a project. But they can also be used to emphasize a design feature or show off an interesting grain pattern.

APOTHECARY CABINET. For the apothecary cabinet, I used a stain both to hide a problem and to emphasize the design.

The wood drawer pulls on the cabinet were birch, so they had to be stained to match the cherry. But I also used the stain to emphasize the small, identical drawers. I did this by staining everything *but* the drawers. The difference between the stained and unstained wood creates a subtle contrast, highlighting the drawers.

SIDEBOARD. The sideboard on page 6 was more of a challenge. Using an off-the-shelf stain was out of the question. The pigments in the stain would hide the curly maple figure.

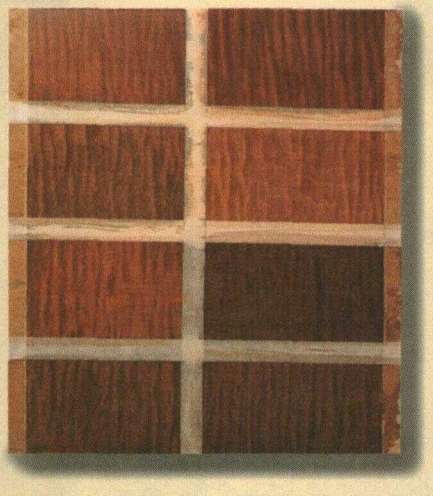

So I used aniline dyes. They actually show off the figure of the grain. All I had to do was mix up the right color.

Pretty soon, my bench was covered with jars of powder and solutions of dyes in different combinations and concentrations. It looked more like a chemistry lab than a woodworking shop.

The result of all these experiments can be seen in the photo. (We chose the second sample from the top on the right side.) A little more work? Yes. But the results really bring out the figure of the curly maple.

COMPUTER BULLETIN BOARD. A couple of months ago Gordon Gaippe, our Publishing Services Manager, dropped by my office to tell me about his new home computer. He started talking about how he could have his computer call into something called a "bulletin board."

Well, I was confused. The only kind of bulletin board I knew of was hanging on the wall down in the lunch room.

"Okay," he said. "Just think if that cork bulletin board was seen and used by all *Woodsmith* readers. And they could post their woodworking questions and advice to other readers. There might also be notices about what to expect in an upcoming issue, meeting announcements — maybe even tools for sale."

My first reaction was that this board would require a lot of cork. "Not if it's on a computer," Gordon said.

Now he had my attention.

It didn't take long before we decided to "test the waters." To begin, we found out through a survey that over 50% of our *Woodsmith* readers own a home computer. So we set up some addresses where readers could contact us (see the "E-Mail" numbers below in the lower left hand corner).

The response was so good that we decided to start our own bulletin board service (BBS). It's called *WoodNet*, and it's officially open for business. (Consider this a computer cable-cutting ceremony.)

If you have a computer and a modem, you can call *WoodNet* at 515-245-9663.

What you will find are indexes of woodworking articles, club newsletters, files and photos to download, and a woodworking HelpLine.

But I think the best part of *WoodNet* are the forums. Here you can post questions and get responses from fellow woodworkers. You can even talk in "real time" with other folks who are signed onto the bulletin board. I'm looking forward to seeing what everyone's talking about.

Until April 1st, *WoodNet* is completely free. If you've never used a bulletin board service, don't worry. There's lots of advice right as you sign on. And if things are still confusing, give Gordon a voice call on the "real" telephone at 515-282-7000. He can answer your questions and get you started.

NEW FACE. Shane Francis has joined *Woodsmith* as our Circulation Analyst.

Don

A LOOK INSIDE

Contents

FEATURES

Classic Sideboard 6

To make this sideboard authentic-looking, we used curly maple veneer and a hand-rubbed varnish finish.

Twin Mortise & Tenon 14

Sometimes two small mortises and tenons are stronger than a single large one. The reason is simple. There's twice as much good gluing surface.

Veneering 18

Here's a veneering technique that uses a traditional veneer but with modern adhesives and no clamps.

Apothecary Cabinet 20

The drawers in this compact cabinet are joined with a locked rabbet. It's a simple way to get a strong joint.

Varnishing 24

Protect your heirloom projects with a hand-rubbed finish that's durable and smooth as glass.

Sawhorses 26

Who couldn't use a pair of sturdy sawhorses? This simple design only takes a weekend to build and will last a lifetime.

DEPARTMENTS

Tips & Techniques 4
Shop Notes 16
Talking Shop 30
Sources 31

Classic Sideboard *page 6*

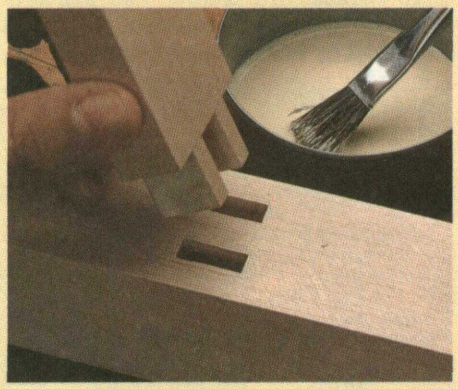

Twin Mortise & Tenon *page 14*

Apothecary Cabinet *page 20*

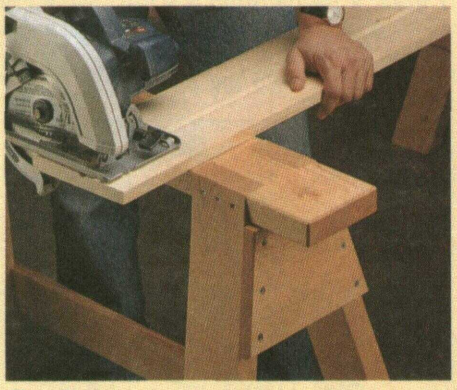

Sawhorses *page 26*

Tips & Techniques

SCORING DOWELS

• A quick and safe way to cut a piece of dowel to length is to use a band saw. But there's always tearout on the backside of the dowel as you finish the cut.

To eliminate the tearout, I'll first score the circumference of the dowel by making a shallow cut (about 1/16" deep). The trick is to keep the dowel from moving from side-to-side while making the cut. (Otherwise, the cut line won't be in the same position all around the dowel.)

To do that, clamp a stop block on your fence (in front of the blade) to set the length that you need. Then place the dowel against the stop block and using your miter gauge for support, slowly roll the dowel against the blade. Roll the dowel until it's scored completely around the outside, see Fig. 1.

Finally, feed the dowel through the blade using the cut line for a guide, see Fig. 2.

Doug Kenney
South Dennis, Massachusetts

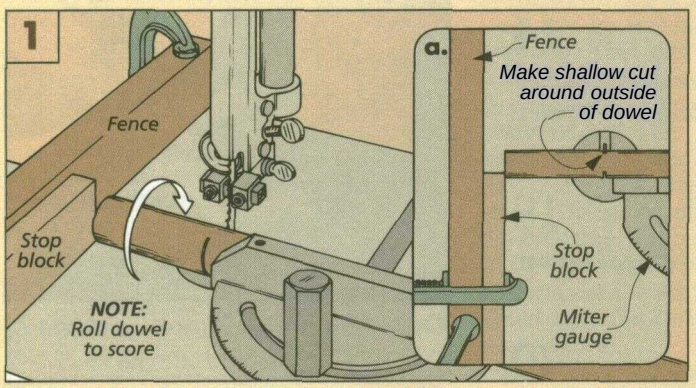

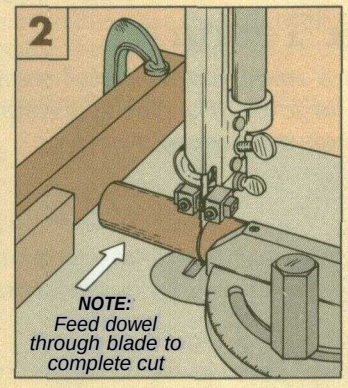

QUICK TIP

PAD PROTECTOR

• I'll use a cotton pad to apply wiping finishes. But the pad sheds fibers as it wears. To keep the fibers out of the finish, I made a "pad protector" from the toe section of a discarded pair of pantyhose. I slip the cotton pad into the toe and tie a knot in the nylon to hold it in place. The nylon traps any loose fibers from getting in my finish.

Jerry Steger
Beaumont, Texas

NAIL SCRAPER

• After routing fluted caps for the classic bookcase in Issue 95, I had burn marks in the flutes. Instead of removing the marks with a hacksaw blade scraper as you suggested, I used a simpler tool for a scraper — a nail.

It's made by grinding the head of a common 10d nail. (I had more nails lying around than old hacksaw blades.) First I made a handle from a scrap block of wood. Next, drill a pilot hole in the block of wood. Then, drive the nail into the handle.

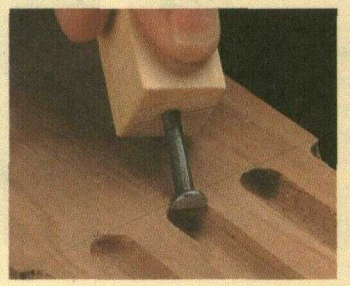

Now grind the head until you get a sharp edge, see drawing.

Pete Potts
Burlington, Wisconsin

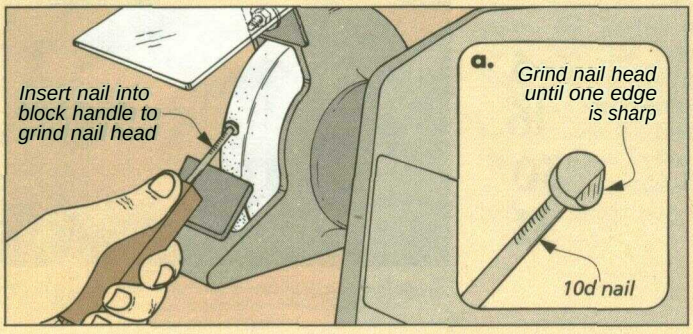

LAYOUT GUIDE

• I use dimension lumber for a lot of jobs. But lining up layout lines between the sides and face can be difficult. That's because the edges are never square.

To solve this problem I use a jig to mark the face and edge in one step. It's just two blocks glued and screwed together to form a right angle, see Drawing.

Jim Hall
San Francisco, California

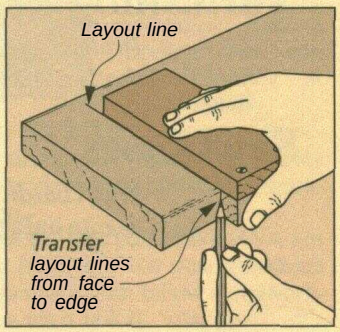

FOAM BRUSH

• I use foam brushes to touch up small areas. But I never have any when I need them.

So I make "instant brushes" by sticking pieces of self-adhesive foam weatherstripping on scrap pieces of wood. For larger brushes, wrap the weatherstripping around the end of the stick.

William Scott
Raleigh, North Carolina

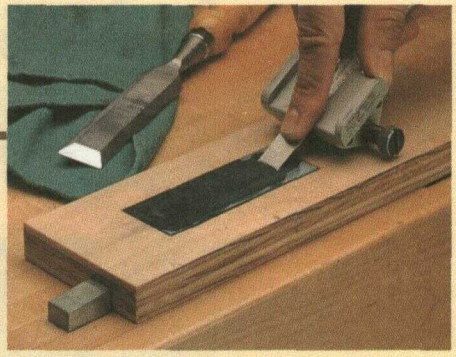

STONE HOLDER

• I just purchased a sharpening guide that rolls on the top of a sharpening stone. But the only stone that I have is too small to work with the guide. So instead of buying a larger (and more expensive) stone, I made a stone holder for my small one. It "extends" the length of the stone so I can use my sharpening guide.

The holder is a ¾"-thick piece of plywood with a pocket routed in one face, see • Fig. 1. The pocket fits my stone and is just deep enough so the top sits flush with the plywood, see Fig. la. Note: Make the holder long enough so there's room for the sharpening guide to roll.

After sharpening a chisel, it's easy to add a micro bevel to the edge. Rather than adjusting the chisel in the guide to change the angle, just slip a thin shim (about 1/16") under it to raise it a little. Then make a few final passes across the stone. Note: I used some Formica for my shim, but any material with a uniform thickness will work.

George Hallgren Sr.
Bel Air, Maryland

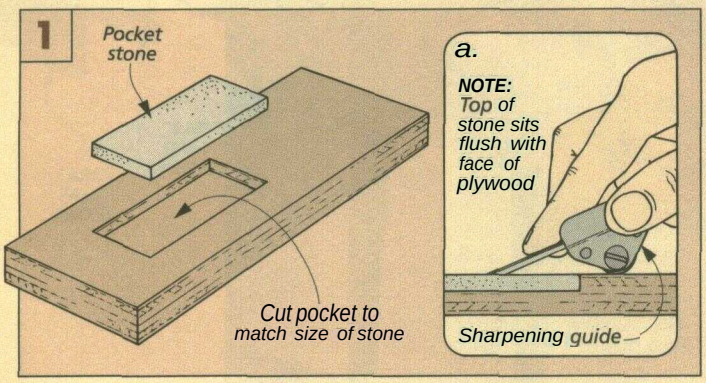

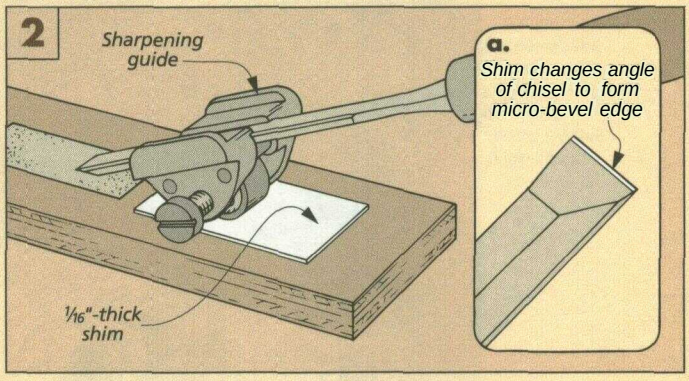

MOUNTING PLATE

• Space in my shop is at a premium, especially the top of my workbench. So I can't mount my tools, like a vise, permanently.

To keep my benchtop tools handy and ready for use, I made a simple mounting plate for each tool. Now I can quickly install or remove them by tightening or loosening a single wing nut.

The mounting plates are just ¾"-thick pieces of plywood bolted to each tool. An alignment pin is glued in one end, and a long bolt is installed in the middle, see Fig. 1. The bolt and wing nut hold the tool to the bench. And the alignment pin keeps the plate from moving, see Fig. 2.

The mounting plates can be different sizes depending on the tool being used. (My grinder has a bigger plate than my vise.) But the alignment pin and threaded bolt are *always* located in the same spot. That way either plate will fit in the same holes drilled in the workbench.

Kenneth Kilmurray
Minot, North Dakota

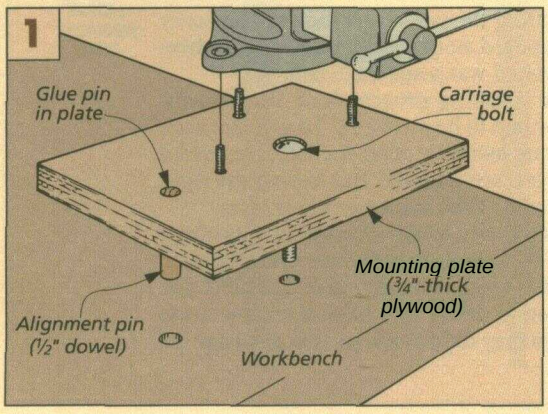

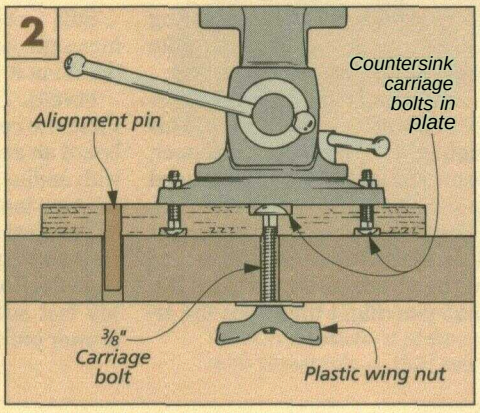

SUBMIT YOUR TIPS

If you would like to share an *original* shop-tested tip, send it to *Woodsmith*, Tips and Techniques, 2200 Grand Avenue, Des Moines, Iowa 50312. Or if it's easier for you, FAX it to us at: 515–282–6741.

E-Mail: 75330.2301@compuserve.com.

If we publish it, we will send you $30 to $150, depending on the published length. Include a brief explanation and sketch (or photo). And don't worry, we'll rewrite the tip and redraw the art if necessary. Also, *please* include a daytime phone number.

Classic Sideboard

Usually, I select the wood to fit the project.
But this time, I selected the project to fit the wood.

Being a pack rat by nature, I had been storing some curly maple veneer in my shop for quite a while. It was just waiting for that perfect project.

Finally, I got the inspiration I needed: an old sideboard sitting in the window of an antique store. This piece would really highlight the figure of the veneer.

Now that I had the project for the veneer, I needed to figure out how to get the veneer on the project. Even though I'd had some experience with smaller pieces of veneer, I was a little worried that it would be tricky to apply this much veneer to a project. But it's actually easier than you might think, see the article on page 18.

Still, just getting the veneer on didn't necessarily mean the sideboard would look good — or authentic. What it needed was a special finish.

FINISH. The finishing process took three steps. First, the color had to be just right. To give the sideboard an antique feel (like aged shellac), I stained it with aniline dyes, see page 12. But finding the right mixture took some time and experimentation.

The next step was to brush on several coats of varnish and rub them out smooth, see the article on page 24. But the process wasn't quite complete yet. My last authentic detail was to darken the brass drawer pulls so they didn't look so new, see page 30.

EXPLODED VIEW

OVERALL DIMENSIONS:
36"H x 48"L x 16"D

Twin mortises and tenons hold the rails to the legs. For step-by-step instructions, see page 14.

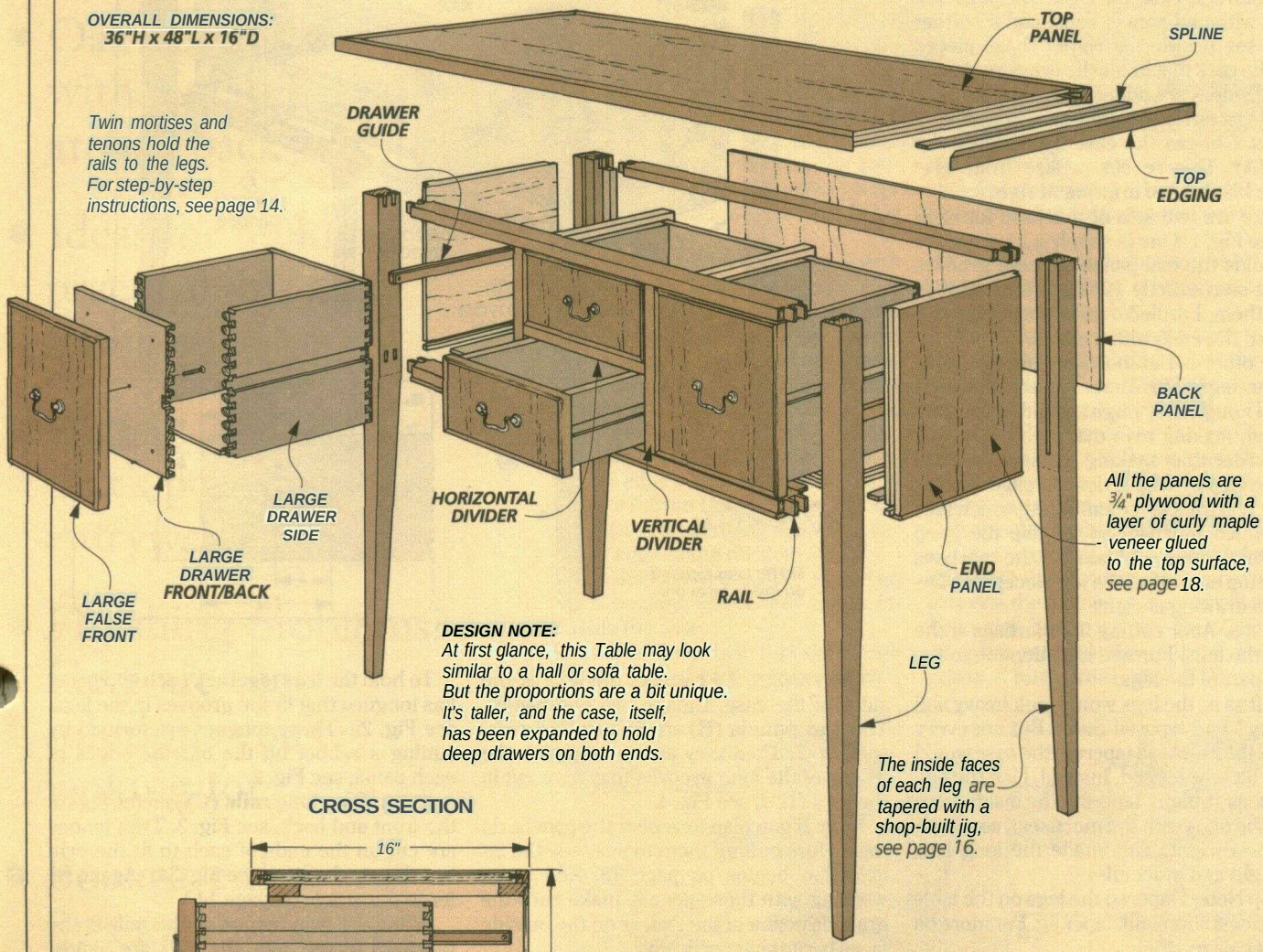

All the panels are ¾" plywood with a layer of curly maple veneer glued to the top surface, see page 18.

DESIGN NOTE:
At first glance, this Table may look similar to a hall or sofa table. But the proportions are a bit unique. It's taller, and the case, itself, has been expanded to hold deep drawers on both ends.

The inside faces of each leg are tapered with a shop-built jig, see page 16.

CROSS SECTION

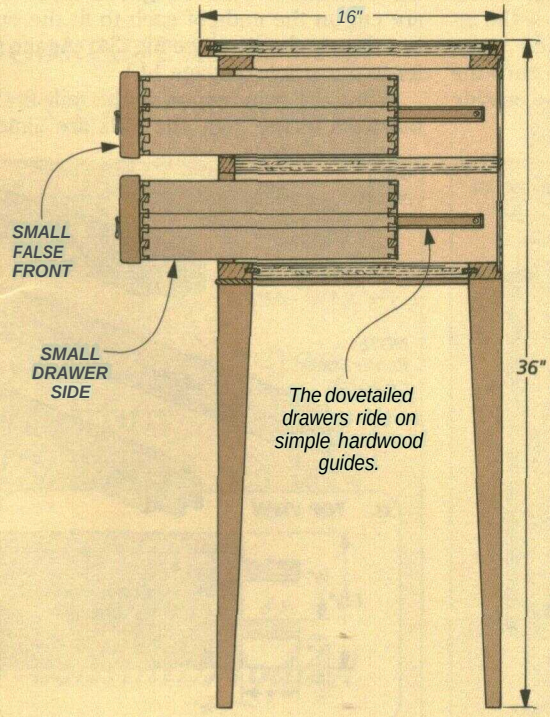

The dovetailed drawers ride on simple hardwood guides.

A *This sideboard is a mix of old and new. The top and drawer fronts are covered with traditional veneer, but the core is modern plywood. Also, the drawers are joined with dovetails — that are cut with a router and a jig.*

CASE

Think of a sideboard as a cross between a side table and a cupboard. It's basically a small storage case on legs. The legs are joined with end panels, rails, and a bottom panel, see drawing at right. These pieces form the case that holds the drawers. A little later, dividers are added to create the individual spaces for the drawers.

LEGS. I began the case by building the legs (A). They're cut to size from 1¾" square blanks, see drawing at right.

There are two sets of mortises for each leg, see Fig. 1. One is simply a long groove that holds the end panels. (These grooves should stop exactly 12" from the top.) To make them, I drilled overlapping holes and squared the ends with a chisel.

The other set of mortises joins the rails and the legs. This time, I used twin mortises. Though they might sound more complicated, making twin mortises really isn't any harder than making a single mortise, see the step-by-step article on page 14.

The real trick is remembering which face gets which mortise. So to help me keep everything straight, I laid out the mortises on the top ends of all the leg pieces, see Detail a in drawing at right.

TAPERS. After cutting the mortises at the top of the legs, I turned my attention to the lower part of the legs.

If left as is, the legs would look heavy and "blocky." So I tapered them. But not every face. If they were all tapered, the case would look a bit bow-legged. Instead, I left the outside faces straight, tapering the inside faces only (the ones with the mortises), see drawing above right. This made the long legs look light and graceful.

Shop Note: I tapered the legs on the table saw using a shop-built taper jig. For more on this, see page 16.

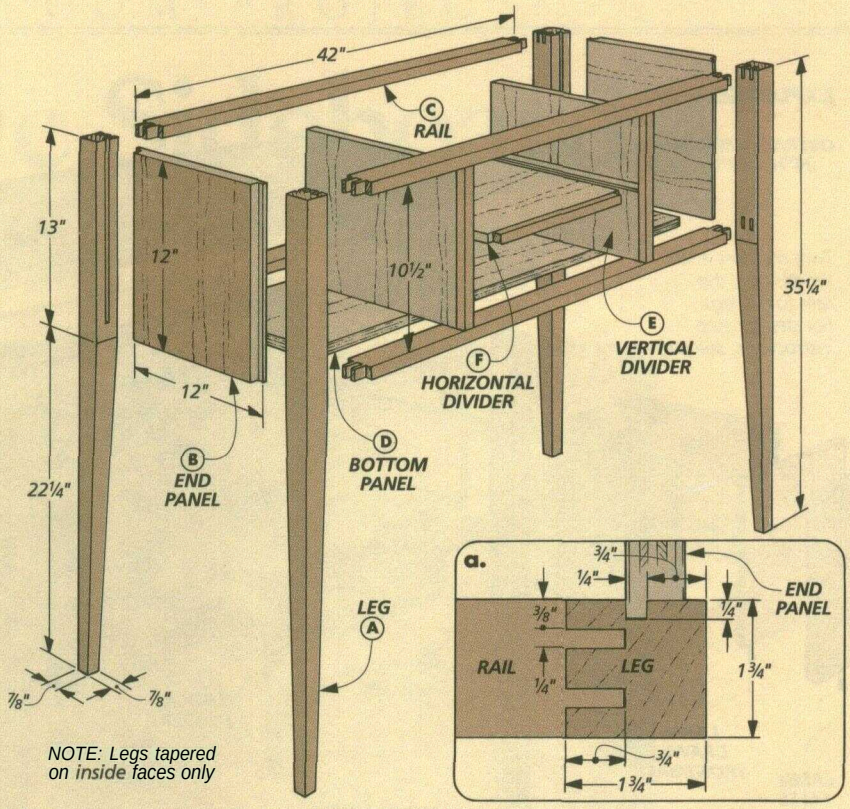

END PANELS. To connect the legs at the sides of the case, I made two end panels. The end panels (B) are first cut 12" wide, see Fig. 2. Then they are cut to match the length of the long grooves that were cut in the legs (12"), see Fig. 1.

Note: If you plan to veneer the panels, do this before cutting them to size, see the article that begins on page 18. And when working with these panels, make sure the grain direction of the *veneer* on the outside faces is running vertically.

To hold the legs together, each end panel has tongues that fit the grooves in the legs, see Fig. 2a. These tongues are formed by cutting a rabbet on the *outside* edges of each panel, see Fig. 2.

RAILS. Four long rails (C) join the legs at the front and back, see Fig. 3. Twin tenons are cut on the ends of each to fit the twin mortises in the legs, see Fig. 3a. (Again, refer to the article on page 14.)

When the twin tenons on the rails fit the mortises in the legs, the rails are almost

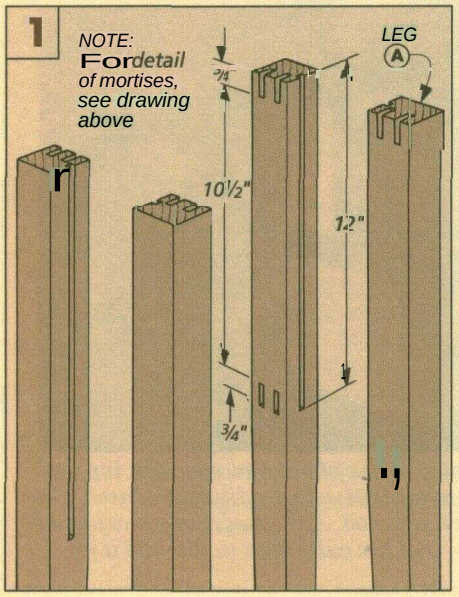

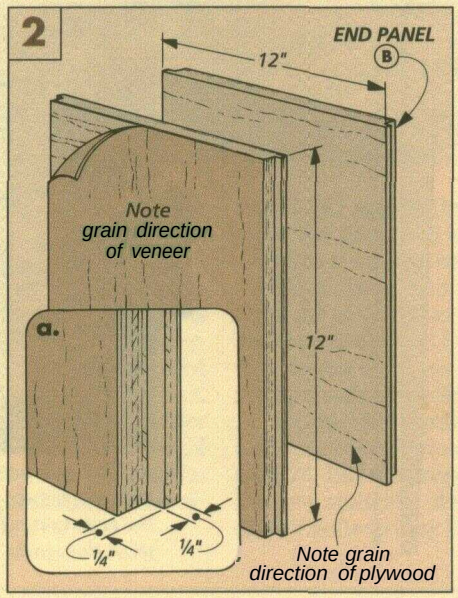

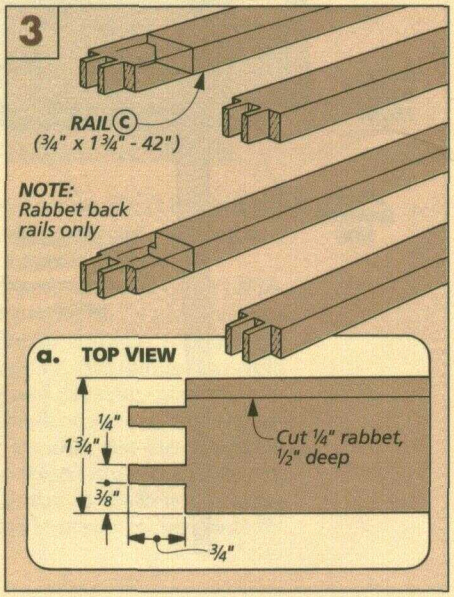

complete. All that's left is to cut a small ¼" x ½" rabbet on the rails at the back of the case, see Figs. 3 and 3a. (These rabbets are for a plywood back that will be added later.)

BOTTOM PANEL. To help strengthen the case and keep it square, I added a ¾"-thick plywood panel for the bottom. To determine the size of this panel, simply dry assemble the case and measure the opening, see Fig. 4. Then the **bottom panel (D)** can be cut to fit in this opening.

To hold the bottom in place, I used simple grooves and hardwood splines, see Fig. 5. There are a couple benefits to this method. First, the bottom panel doesn't need to be notched to fit around the legs. And second, all the ⅜"-deep grooves can be cut with the same setup, see the Shop Tip above right.

When the grooves were routed, I cut 11/16"-wide **splines (E).** (These are a little narrow to allow room for extra glue.)

ASSEMBLY. Now the case is ready to be assembled. This is a two-step process.

The first thing to do is make two end assemblies by gluing the end panels between the legs, see Fig. 5. When these are dry, all that's left is to connect the end assemblies with the rails and the bottom panel.

DIVIDERS. At this point, the outside of the case is complete. The next step is to add the dividers for the drawers, see the drawing at the top of page 8. Both the vertical and the horizontal dividers are plywood panels with edging strips on the front.

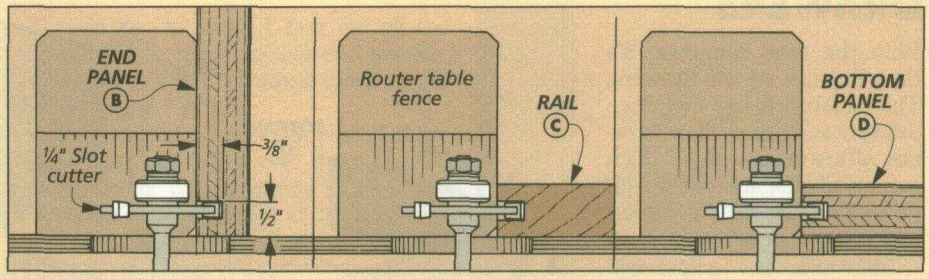

SHOP TIP: *To cut grooves for the splines, I used a ¼" slot cutter bit in the router table. This way, I could rout the slots in the end panels (B), rails (C), and bottom (D) with the same setup. And I didn't have to stand the long bottom panel on end.*

VERTICAL DIVIDERS. Start with the two **vertical dividers (F)** first, see Fig. 6. To determine their height (length), measure between the two rails. Note: In case the rails bow towards the middle, measure at the ends of the case, not the center.

As for their depth (width), the dividers align with the edge of the rabbet in back and are set back ¾" from the front, see Fig. 6a. This ¾" is for a strip of edging that will cover the plywood edge of the divider.

After the dividers are cut to size, two things must be done before they can be installed inside the case.

First, cut a ⅜"-deep dado that's centered on the inside face of each vertical divider, see Fig. 6a. These dadoes will hold the horizontal divider, which is also a piece of ¾"-thick plywood, see Fig. 7.

When the dadoes are cut, apply a strip of ¾"-wide **vertical edging (G)** to the front of each divider. Then the dividers can be screwed in the case, see Fig. 6.

Note: When installing the vertical dividers, it's critical that they're parallel to the sides of the case. Otherwise, you'll have trouble later fitting the drawers.

HORIZONTAL DIVIDER. The last piece to add to the case is the **horizontal divider (H).** With this divider, cut the plywood to fit between the dadoes in the vertical dividers. Then glue it in place, see Fig. 7. Finally, to cover the exposed edge of the plywood, add a strip **of horizontal edging (I).**

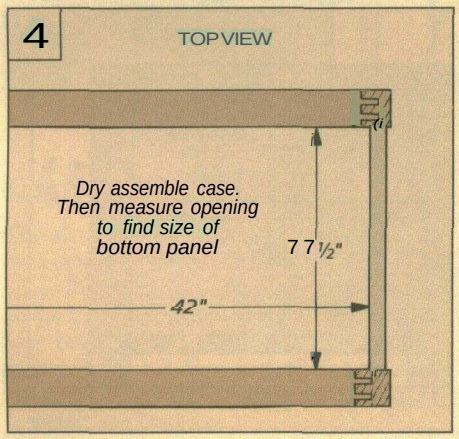

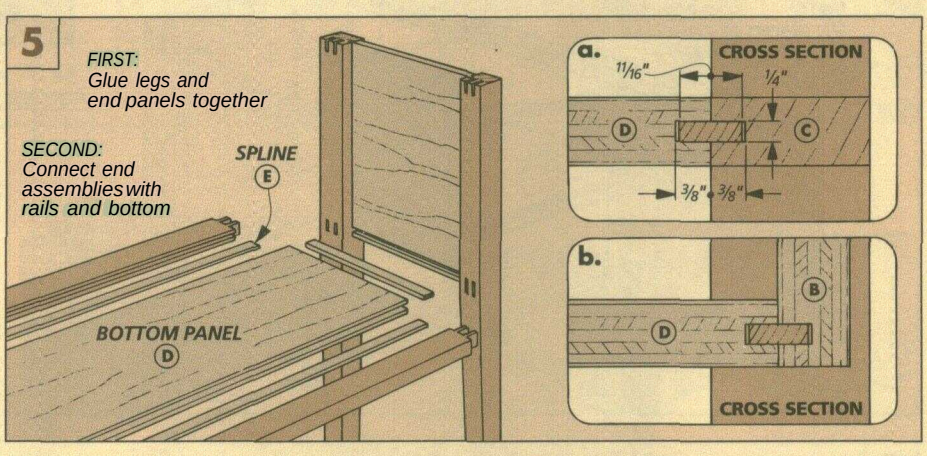

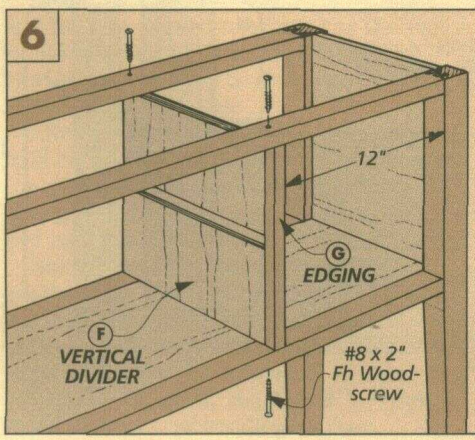

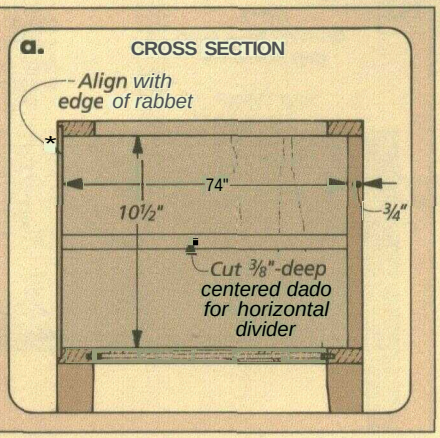

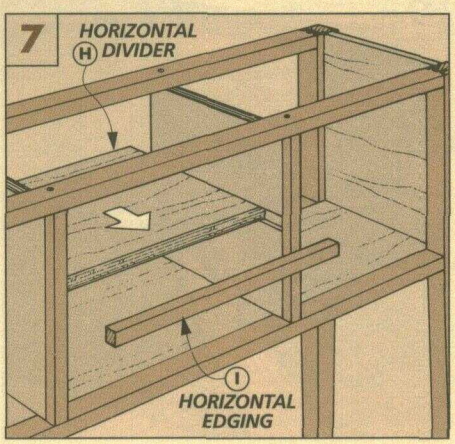

DRAWERS

With the case complete, it's time to work on the drawers. This sideboard has two deep drawers and two shallow drawers. All are made with ½"-thick soft maple and are joined with dovetails. Later, false fronts are added to the drawers.

DRAWERS. I used a jig to rout the dovetails on the drawers, so the height of each had to be a multiple of ⅞". (This leaves a half pin at the top and bottom of the drawer, see drawing at right.) The **large drawer fronts/backs (J)** and **sides (K)** are 9⅝" tall (wide). The **small drawer fronts/backs (M)** and **sides** (N) are 4⅜" tall. As for the width and depth of the drawers, the fronts and backs are ½" narrower than the openings. And the sides are 12¾" long.

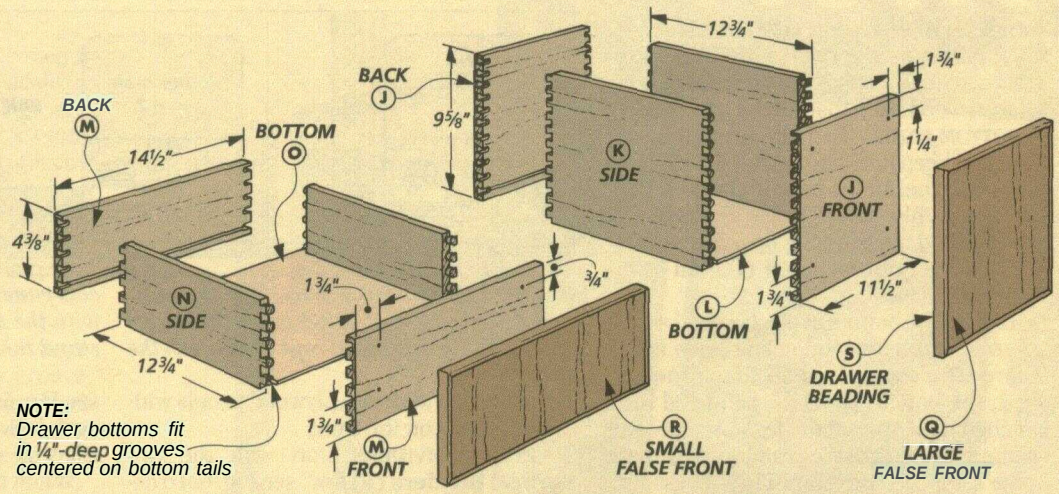

For the **drawer bottoms (L, O),** I used ¼"-thick maple plywood set in ¼"-deep grooves. (The tops of these grooves are located ½" from the bottom of each piece.)

DRAWER GUIDES. When the drawers are built, the next step is to add the **drawer guides (P).** (The false fronts will be added later.) These guides are just ¾" x ½" strips of hard maple, see Fig. 8a.

Getting the guides positioned correctly can be tricky. There are two things you need to get right. First, the guides have to be mounted parallel to the bottom. A quick way to do this is to make a spacer for each guide to set on, see Fig. 9.

Second, the guides have to be set back ¾" to allow for the false drawer fronts. To do this, I simply marked these locations inside the case and lined up the guides with the marks, see Fig. 8a.

FITTING THE DRAWERS. With the guides in place, it's time to fit the drawers. The goal here is to end up with a snug, smooth fit with no side-to-side movement.

To fit the drawers, I cut a centered groove in each drawer side, see Figs. 10 and 10a. These grooves are cut so the drawers fit over the guides in the case. But to get the drawers to slide in and out easily requires a

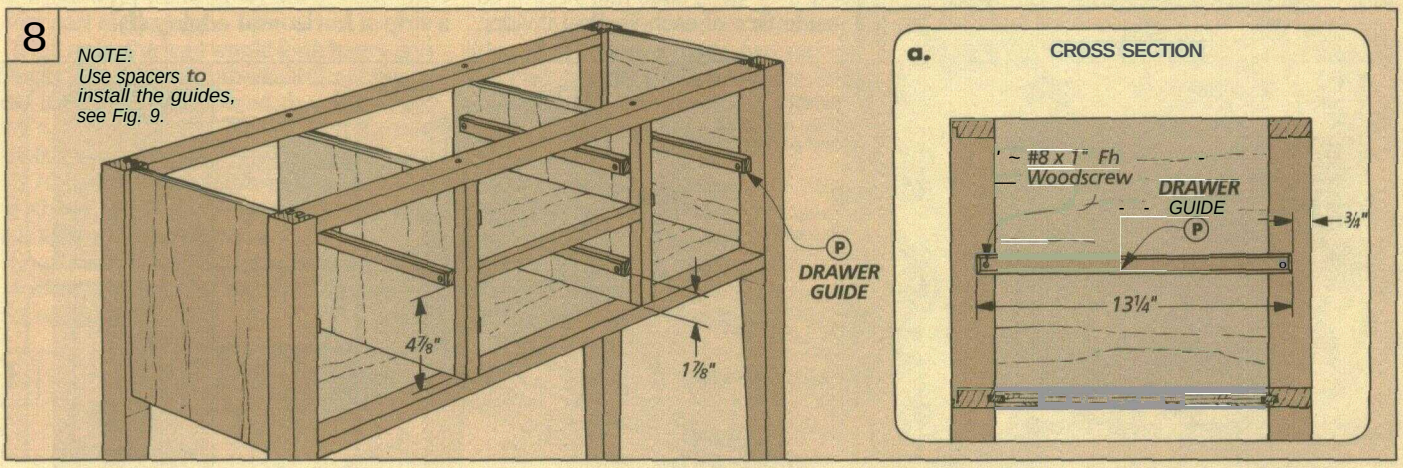

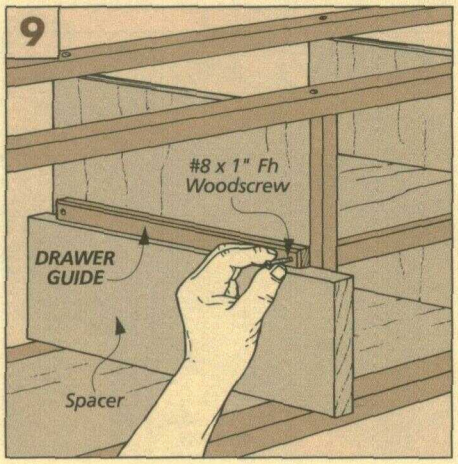

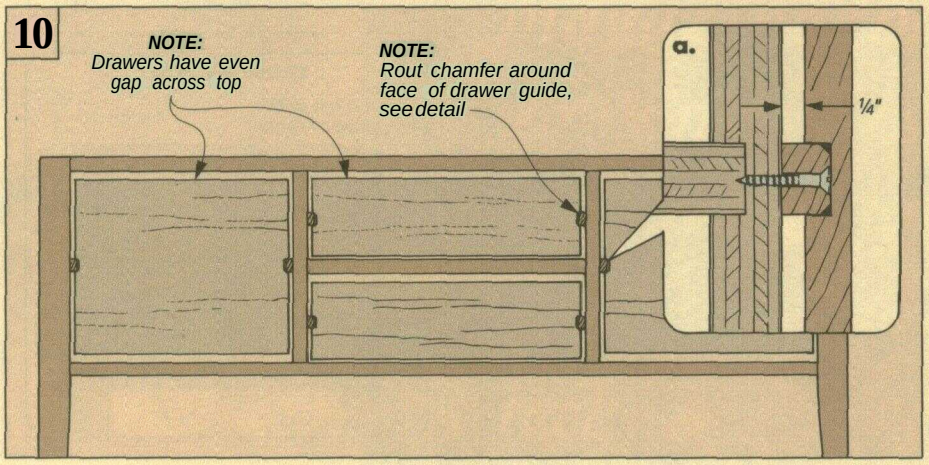

little custom fitting. For more on fitting the drawers in the case, see page 16.

FALSE FRONTS. After all the drawers are in place, the last step is to add the false fronts. *The* **large** and **small false fronts (Q & R)** are made from ¾"-thick plywood plus a layer of veneer.

Usually, I cut drawer fronts to fit their openings with only a 1/16" gap on each side. But these false fronts are a little different. They're 5/16" short on each side, see Fig. 11. In addition to the 1/16" gap, this extra ¼" allows for strips of beading to cover the edges of the plywood, see Fig. 12.

BEADING. To make the **drawer beading** (S), I started with oversize blanks (¼" x 2") that have an ⅛" radius routed on all the edges. This way I could get two strips from each blank, see Shop Tip above right.

To add the beading, I first cut all the pieces to length, mitering each end, see Fig. 12. Then glued and clamped them to the false front, see Fig. 12a.

ADDING THE FALSE FRONTS. Now that the false fronts are complete, they can be mounted to the drawers, see Fig. 13, To do this, center the false fronts in the openings. Then stick the false fronts to the drawer fronts with double-sided carpet tape. (Make sure there's an even gap all the way around.) Now drill shank and pilot holes, remove the tape, and screw them together.

To mount the brass pulls, drill two holes through both the false front and the drawer front, see Fig. 13a. These holes should be centered top-to-bottom and side-to-side. (Mine were 3" apart) Finally, screw the pulls in place. Note: The threaded rod and nut provided with my pulls were too short to go through both the false front and the drawer front. So I replaced them with 1¼"-long machine screws.

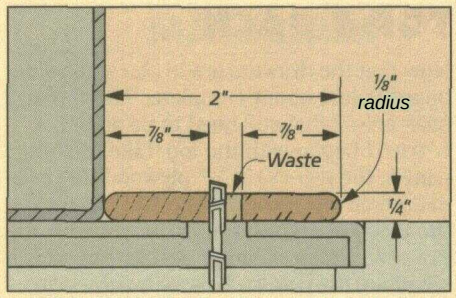

SHOP TIP. *The beading for the drawers and end panels started as 2"-wide blanks. After rounding the edges, I ripped each blank into two ⅞"-wide strips.*

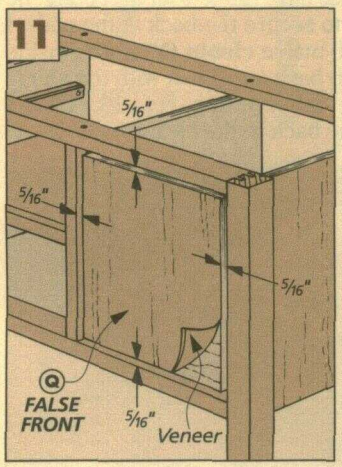

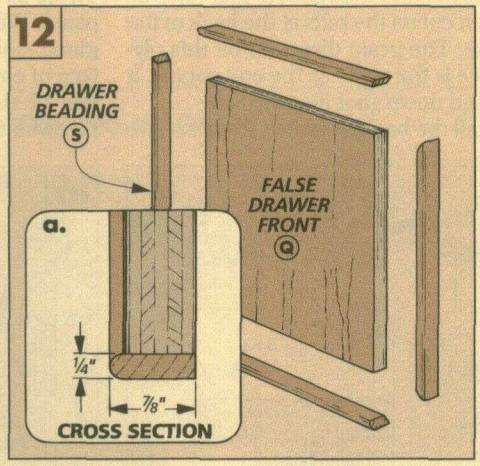

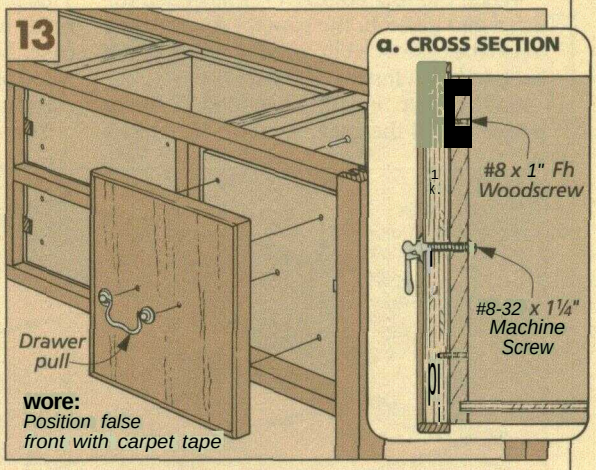

CASE BEADING

The same beading that surrounds the drawers is also applied to the bottom edges of the case. But here you need two different size strips to match the pieces they're glued to. The beading under the end panels is the same as the beading around the drawers, see detail a. But the beading at the front rail is wider, see Detail c.

Again, I started out with 2"-wide blanks just like the drawer beading. For the **end panel beading (T),** the blank is ripped into two ⅞"-wide pieces. The **front rail beading (U)** is ripped 1⅞" wide.

After the beading strips are cut to length to fit between the legs, they can be added to the case. The end panel beading strips are simply glued on flush with the inside of the end panels, see Detail a.

But the beading along the front requires another step. Since the rails are flush with the legs, the ends of the beading stick out, creating tiny, sharp corners, see Detail c. So to remove these sharp corners, I sanded an ⅛" radius on each, see Detail b. Then I glued the front rail beading in place.

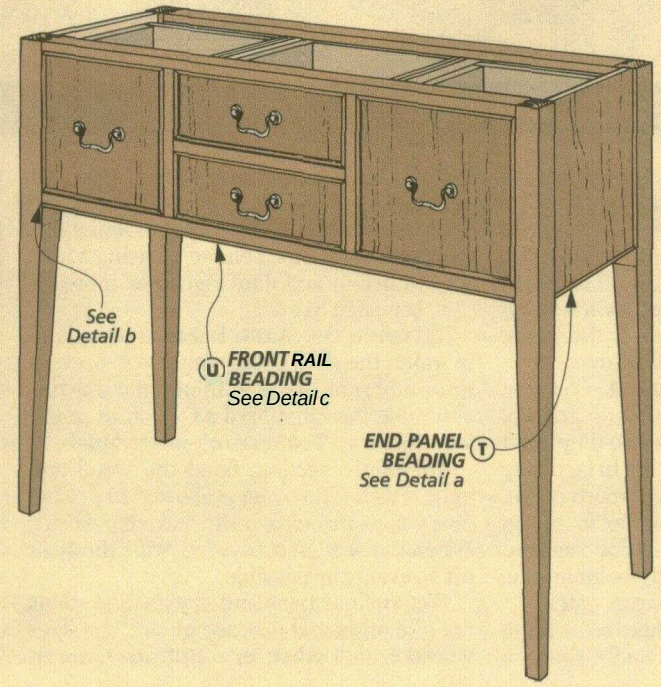

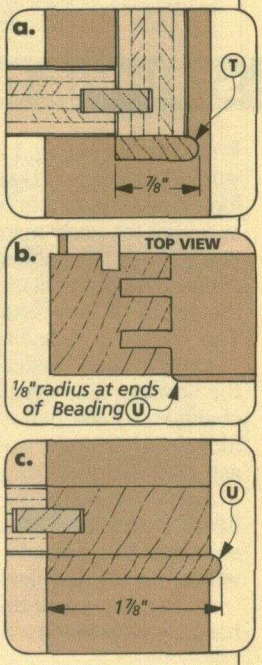

TOP & BACK

Now that the drawers are in place, the sideboard is just about complete. The top and back are all that still need to be added.

TOP. I began with the top. Like the other panels, the top (V) is ¾" plywood that's veneered on one face, see Fig. 14. This means the piece of plywood must be cut with the grain direction running across the width, not along the length. This allows the veneer to be applied across the grain, refer to the article on page 18.

The top panel needs hardwood strips to cover the edges of the plywood. To do this, I used the same method as on the bottom: grooves and splines, refer to page 9. The splines keep the top and the edging aligned, and no tongue needs to be cut on the plywood panel to fit the groove.

When the **top edging (W)** has been mitered and glued to the panel, I screwed the top to the case, see Fig. 14. (It's centered left to right but is flush at the back.)

BACK PANEL. Finally, I added a **back panel** (X) to the case, see Fig. 15. This is simply a ¼"-thick piece of maple plywood. This panel fits into the rabbets that have already been cut on the rails at the back of the case. Note: The grain direction on this plywood piece is the same as the end panels. It runs up and down (not lengthwise).

To install the back, I wanted to screw it to the top and bottom rails. That's no problem. These pieces have rabbets for accepting the panel. But to secure the back at the ends, I glued small maple **cleats (Y)** to the inside face of each back leg (flush with the shoulder of the rabbet), see Fig. 16. Then I screwed the back to the cleats. ❑

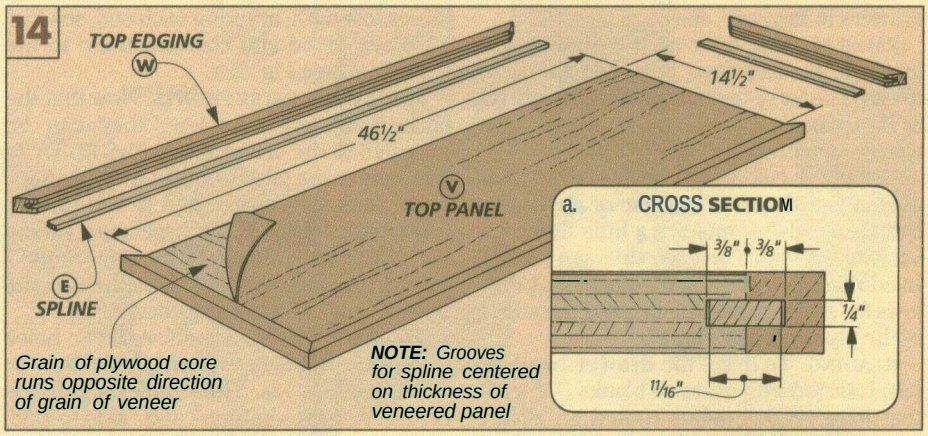

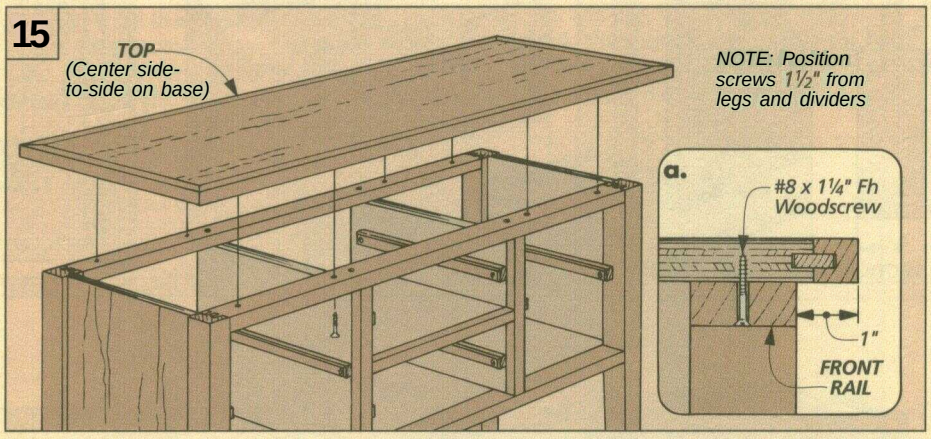

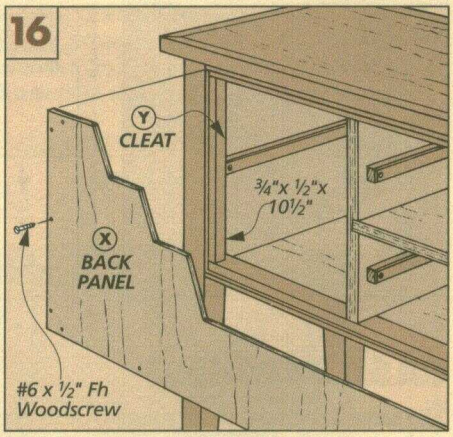

STAINING THE SIDEBOARD

From the beginning, I knew this sideboard would get stained. I wanted it to have the look of an antique. But I also wanted to make sure that the curly maple figure wasn't hidden. That's a problem with off-the-shelf stains. The pigments in them sit on top of the wood, so they tend to cover the grain. The solution is to use an aniline dye.

ANILINE DYES. Instead of sitting on top of the wood, aniline dyes soak in and actually change the color of the wood. So they don't hide the grain of the wood at all. In fact, they actually enhance it by giving it more depth.

Aniline dyes come in powder form, so you have to mix them yourself. (For sources, see page 31.) I used a water-soluble dye, which quickly dissolves in warm water.

At first, you might think this makes them harder to work with. But actually, this is a benefit. Mixing your own stain means you can control the color. I tried a number of dyes in a number of different combinations and concentrations. I ended up using a mixture of bright and dark red. (For more on this, see page 31.)

APPLYING THE STAIN. Because it's mixed in water, the stain is very thin. So to prevent drips and runs, the first thing I did was disassemble the sideboard as much as possible. This way, I could work in sections.

To stain a section, flood the wood and keep it wet. If the stain is allowed to dry before you're through, it will leave lap marks. When the section is covered, wipe the stain off as evenly as possible.

Wet aniline stains and dry analine stains are like night and day, see photo. The dyes will look dull when dry. But don't worry.

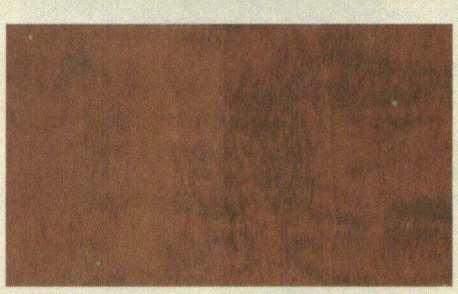

A *Without any top coat (left), an aniline dye will look dull and flat. With a top coat (right), the depth of the color returns.*

When the top coat of finish is applied, the dye will regain its brightness and color.

After staining the sideboard, I brushed on several coats of varnish and rubbed it smooth. For more on this, refer to page 24.

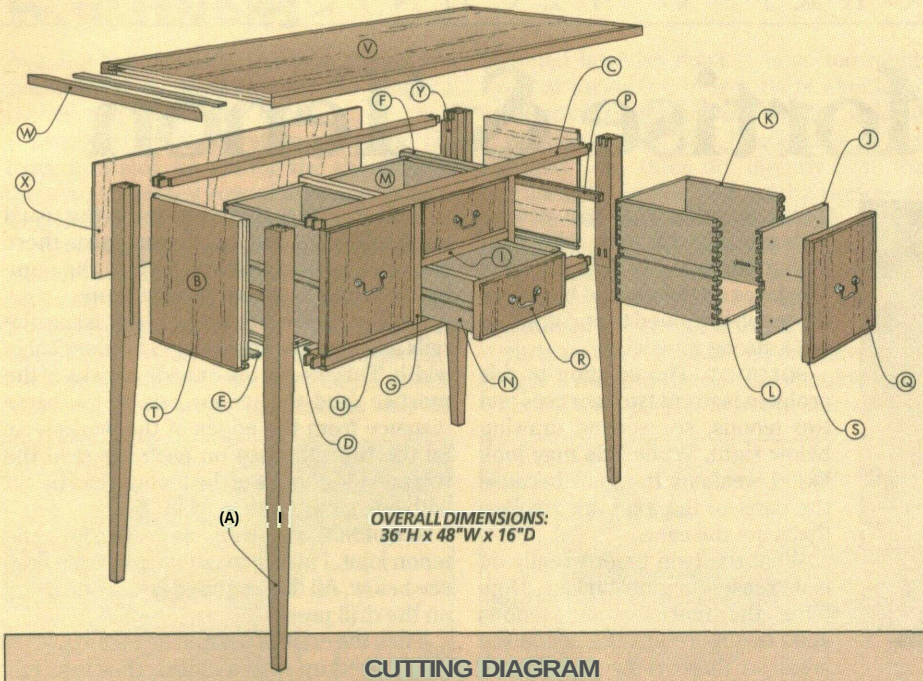

MATERIALS

WOOD

A	Legs (4)	1¾ x 1¾ - 35¼
6	End Panels (2)	¾ ply - 12 x 12
C	Rails (4)	¾ x 1¾ - 42
D	Bottom Panel (1)	3/4 ply - 11½ x 42
E	Splines (4)	¾ x ¼ - 72 rgh.
F	Vertical Dividers (2)	¾ ply - 14 x10½
G	Vertical Edging (2)	¾ x ¾ - 10½
H	Horizontal Divider (1)	¾ ply - 14 x 15¾
I	Horizontal Edging (1)	¾ x ¾ - 15
J	Lg. Drawer Fr./Bk. (4)	1/2 x 9⅝ - 11½
K	Lg. Drawer Sides (4)	½ x 9⅝ - 12 3/4
L	Lg. Drawer Btm. (2)	¼ ply - 12½ x 11
M	Sm. Drawer Fr./Bk. (4)	½ x 4 3/8 - 14½
N	Sm. Drawer Sides (4)	½ x 4⅜ - 12¾
O	Sm. Drawer Btm. (2)	¼ ply - 12½ x 14
P	Drawer Guides (8)	¾ x ½ - 13¼
Q	Lg. False Fronts (2)	3/4 ply - 9⅞ x 11 3/8
R	Sm. False Fronts (2)	3/4 ply - 4¼ x 14⅜
S	Drawer Beading (4)	¼ x ⅞ - 48 rgh.
T	Fr. Rail Beading (1)	¼ x 1⅞ - 41 rgh.
U	End Panel Beading (2)	¼ x ⅞ - 12 rgh.
V	Top Panel (1)	¾ ply - 46½ x 14½
W	Top Edging (2)*	¾ x ¾ - 72 rgh.
X	Back Panel (1)	1/4 ply - 40½ x 11½
Y	Cleats (2)	¾ x ½ - 10½

*Size Edging to cover Top Panel and veneer

SUPPLIES

- 10 Sq. Ft. Curly Maple Veneer
- (8) #8 x 2" Fh Woodscrews
- (32) #8 x 1" Fh Woodscrews
- (4) Swan Neck Brass Pulls/w Screws
- (8) #8 x 1¼" Fh Woodscrews
- (22) #6 x ½" Fh Woodscrews

CUTTING DIAGRAM

¾"x 48" x 96" Birch Plywood

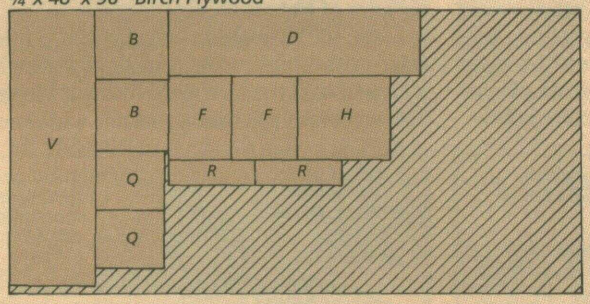

¼"x 48" x 48" Maple Plywood

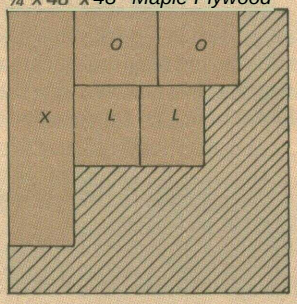

8/4"x4" - 72" Hard Maple (4 Bd. Ft.)

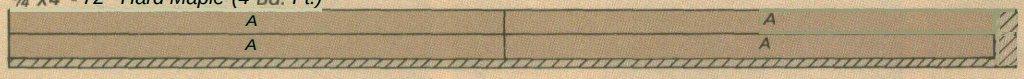

¾"x 6½" - 96" Hard Maple (4.3 Bd. Ft.)

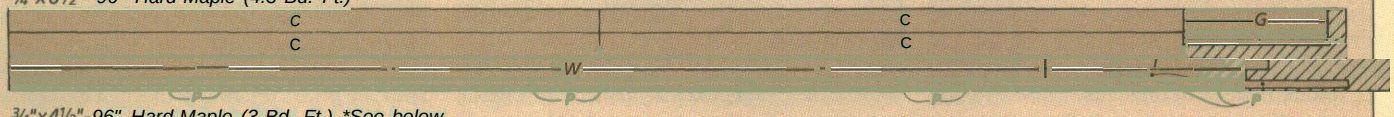

¾"x4½"-96" Hard Maple (3 Bd. Ft.) *See below

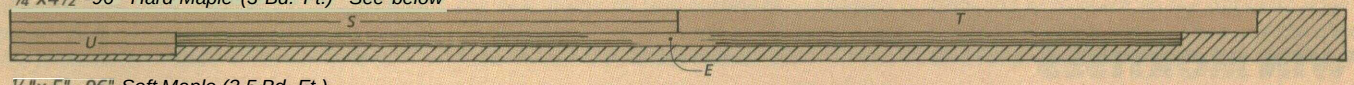

½"x 5" - 96" Soft Maple (3.5 Bd. Ft.)

½"x 5" - 96" Soft Maple (3.5 Bd. Ft.)

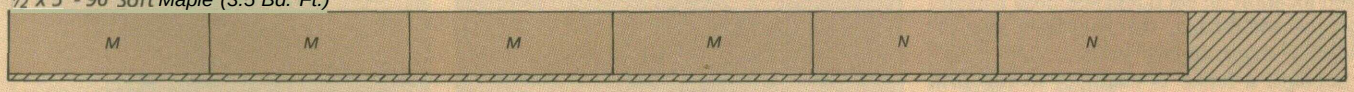

½"x5" - 96" Soft Maple (3.5 Bd. Ft.)

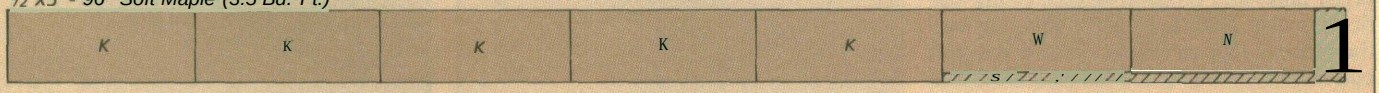

½"x5" - 48" Soft Maple (1.7 Bd. Ft.)

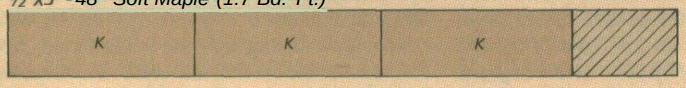

*NOTE: The blanks for the strips of beading (S, T, U) must be resawn into ¼"-thick pieces. You'll need four pieces for the drawers (S) but only one for the front rail (T) and two for the end panels (U).

Twin Mortise & Tenon

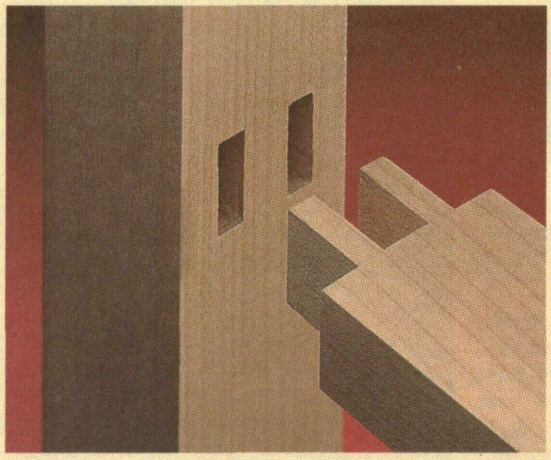

Bigger isn't always better. Take a mortise and tenon joint, for instance. Instead of one large mortise and tenon, sometimes it's better to cut two small tenons that fit in two small mortises, see photo above. The reason? It all has to do with the orientation of the workpiece that fits into the mortises (the piece with the tenons).

VERTICAL RAILS. With most projects (like tables, for instance) the rails or stretchers are joined to the legs vertically. That is, they're oriented up and down, see first drawing at right. With this joint, there's a lot of good face grain to face grain gluing surface on the long cheeks of the tenon.

HORIZONTAL RAILS. But the rails on the sideboard are different. They face down, so they sit horizontal, not vertical, see first drawing. This creates an opening for the drawers. But this orientation also creates a problem. Instead of one wide rail with good gluing surface, what you end up with are two thin rails with poor gluing surface, see first drawing. The faces on the top and bottom of the tenon are glued to end grain — not a strong glue joint.

SOLUTION. The solution to this problem is to cut two mortises and two tenons, see second drawing below right. While this may look like it weakens the joint because the parts of the joint are smaller, that's not the case.

What the twin tenons really do is increase the glue surface. Doubling the mortises and tenons adds two more cheeks inside the joint. So there is twice as much good gluing surface that's available.

MORE WORK? Okay, a twin mortise and tenon joint is a good choice for joining legs with narrow (thin) rails. But aren't two mortises and two tenons twice the work of a traditional (single) mortise and tenon joint?

Well, it's true, there are twice the usual number of cuts. But that doesn't mean there are twice as many setups. In fact, the number of setups is practically the same.

For the classic sideboard in this issue, the rails and legs are designed to be identical in width. This means the outside cheeks of the mortise (and the tenon) can be the same distance from the edges of the workpiece. So the two mortises on each leg (and the two outside cheeks of the tenons) can be cut with one setup each.

SEQUENCE. As with any mortise and tenon joint, I prefer to cut the mortises first, see below. All this requires is just one setup on the drill press.

Then the ends of the mortises can quickly be squared up with a chisel. (For information on a special chisel for squaring up the corners of a mortise, refer to page 30.)

Later, the tenons can be cut *slightly* oversize on the table saw. And finally, they're trimmed to fit perfectly, see the step-by-step sequences on the facing page.

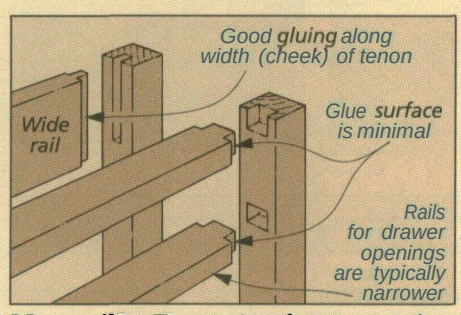

More rails. *To create a drawer opening, there are two rails instead of one. But there's less good glue surface on the tenons.*

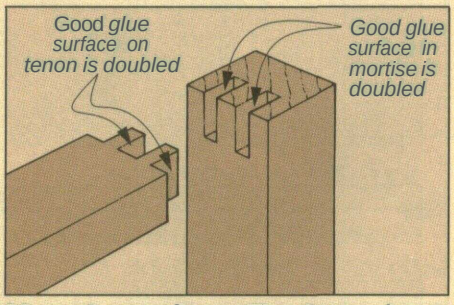

More glue surface. *The glue surface is doubled with a twin mortise and tenon. And the glue's on long grain, not end grain.*

TWIN MORTISES

There's nothing unusual about drilling twin mortises. There's just three simple steps.

First, the mortises are laid out in the desired location on each leg, see Step 1. Note: For the sideboard, the mortises are ¼" wide, ¾" deep, and ¾" long.

Second, a fence is clamped to the drill press table and positioned for drilling the first mortise. After drilling the first mortise, the piece is flipped end-for-end for the second mortise, see Step 2. Because the outside cheeks of the mortises are the same distance from the outside edges of the leg, every mortise can be drilled using this setup.

The third step (not shown) is to square up the ends of the mortises with a chisel.

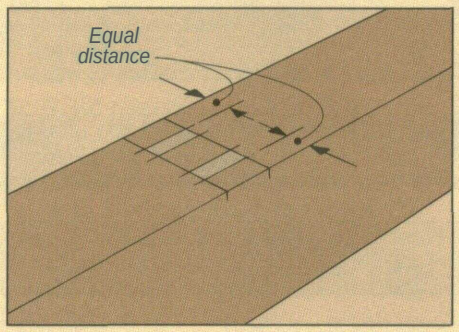

Step 1, *To indicate the length of the mortises, lay out the top and bottom of all the mortises on each workpiece. Then lay out the fours sides to indicate the width.*

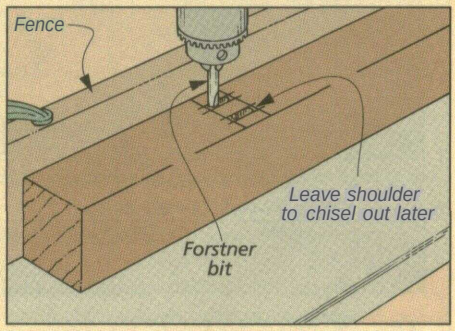

Step 2. *Install a Forstner bit in the drill press, then clamp a fence to the table. Now each mortise is drilled with overlapping holes. Then cleaned up with a chisel.*

TWIN TENONS

Just like the mortises, the twin tenons are symmetrical, so there are only two setups. I started with the outside cheeks.

OUTSIDE CHEEKS. First, position the rip fence as a stop for cutting the shoulder of the tenon, see first row of drawings below. This determines the length of the tenon.

Next adjust the height of the blade to establish the cheeks — but don't try to get it perfect the first time. Make a series of overlapping cuts for the first cheek. Then flip the workpiece over and cut the second cheek.

Check the fit and raise the blade if necessary. But remember, the cheeks will be trimmed later, so don't remove too much wood at this point. In fact, there should be some small ridges for you to clean up later.

INSIDE CHEEKS. The inside cheeks are cut next. I lay them out directly from the mortises. To do this, just set the workpiece over the mortises and make a mark, see the photo at right. Like the outside cheeks, the inside cheeks also require only one setup. But this time, the workpiece stands on end, see the second row of drawings.

TRIM TO FIT. After both tenons have been roughed out, the cheeks and shoulders are trimmed for a perfect fit in the mortises. ❑

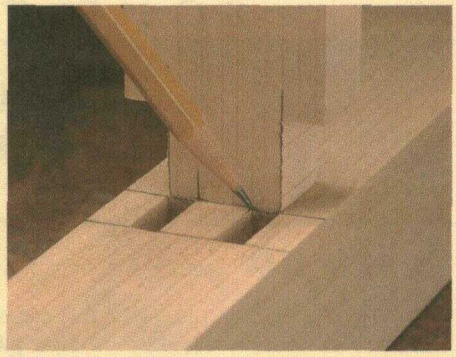

Mark tenons from mortises. *The mortises on the leg can be used to quickly indicate the position of the tenons on the rail.*

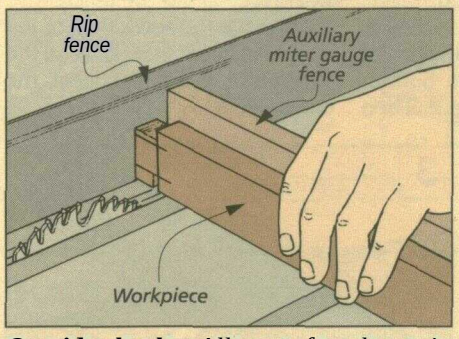

Outside cheeks. *All cuts for the twin tenons can be made on the table saw. An auxiliary fence on the miter gauge prevents chipout on the back side of the cut.*

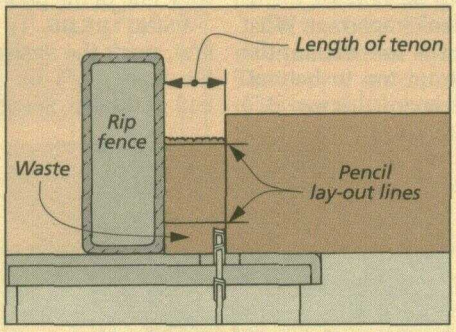

Step 1. *The distance between the rip fence and the outside of the saw blade establishes the length of the tenon. The waste is cleaned out with overlapping cuts.*

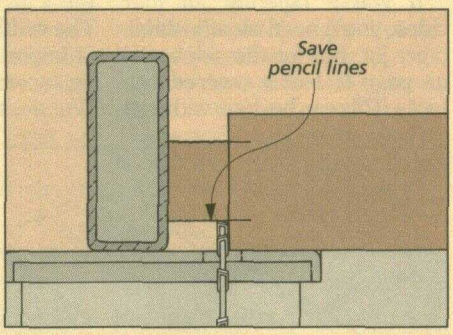

Step 2. *Sneak up on the final size of the cheeks (just below the pencil marks). The small ridges left on the cheeks will be shaved for a perfect fit in the mortises.*

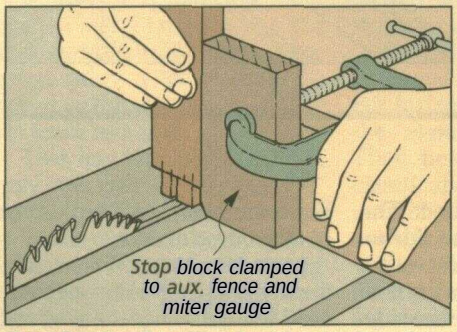

Inside cheeks. *The inside cheeks of the tenons are cut with the workpiece standing on end. A stop block clamped to the auxiliary fence helps support the workpiece.*

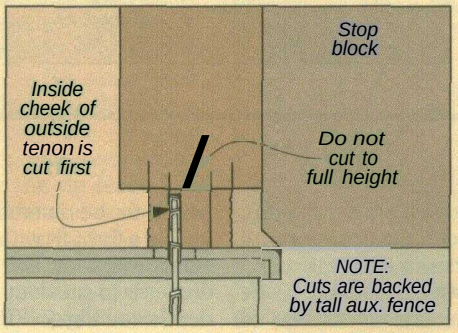

Step 1. *To cut the inside cheeks first raise the saw blade to just under the shoulder. Then clamp a stop block to the auxiliary fence to cut the inside cheek.*

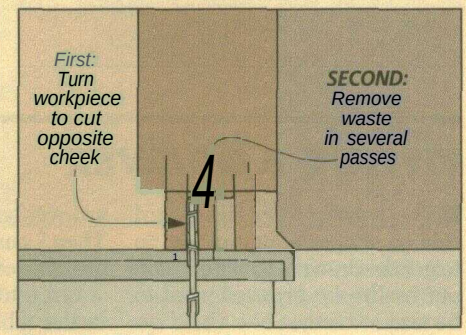

Step 2. *Without changing your setup, turn the workpiece so the opposite edge is against the stop block. Then cut the cheek and remove the waste between the tenons.*

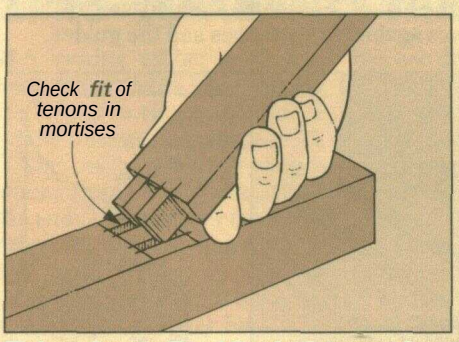

Trimming to fit. *After both tenons have been rough-cut, test the fit in the twin mortises. The cheeks and shoulders will probably have to be shaved for a perfect fit.*

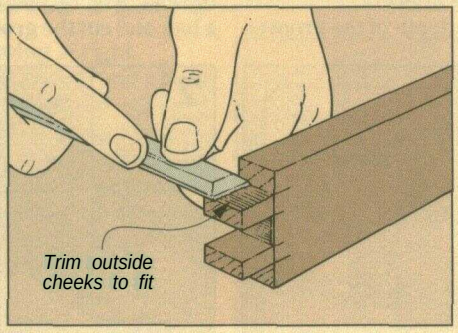

Step 1. *If the tenons don't fit perfectly in the mortise, the ridges on the outside cheeks need to be removed. All it takes is a few paring cuts with a sharp chisel.*

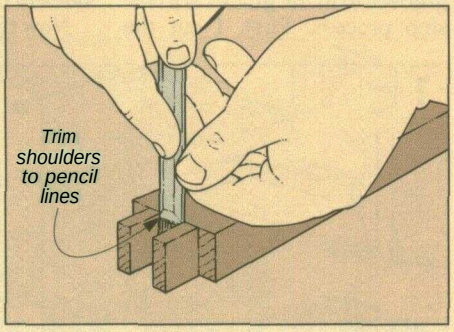

Step 2. *In order for the tenons to seat fully in the mortises, the shoulders of the tenons also need to be trimmed. The inside shoulder can be slightly back-cut.*

Shop Notes

TAPER JIG

• On a formal project, the legs look better if they're tapered, rather than square. The fastest and easiest way to do this is to use the table saw and a taper jig.

If you're tapering all four sides, you'll need an adjustable taper jig. But for the sideboard on page 6, I only tapered two faces. This can be done with a jig that can be made quickly from a couple pieces of scrap wood.

MAKING THE JIG. Start with a piece of plywood the same length as the tapered section on the actual leg (22 ¼"), see Fig. 1. The width isn't important. What *is* important is the amount the jig tapers from top to bottom. (For the sideboard, this was ⅞".)

I used the band saw to cut the taper on the plywood. Then sanded the cut edge smooth. Finally, to hold the workpiece in the jig, I screwed a stop to the wide end of the plywood.

USING THE JIG. To use the jig, first, mark the desired width of the taper (⅞") on the bottom end of the leg, see Fig. 2. Then position the table saw rip fence so the blade aligns to the waste side of the pencil mark.

Now the leg can be tapered by sliding both the jig and the workpiece along the fence.

To make the second taper cut on the adjacent face, just roll the workpiece 90° and repeat the cut, see Fig. 3.

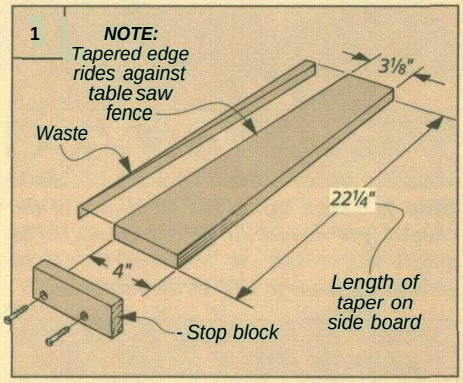

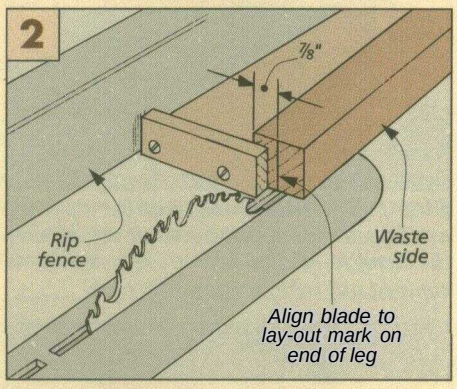

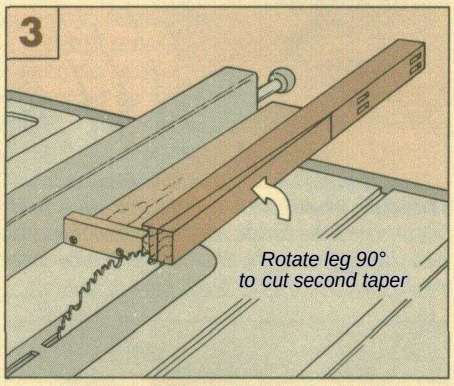

FITTING A DRAWER

• The drawers in the sideboard ride on simple wood guides. So to get the drawers to slide in and out easily, the grooves need to be sized exactly.

Note: Before installing the wood guides, I chamfered their outside edges first, see Fig. la.

TWO STEPS. Getting all the grooves to fit the guides is a two-step process. First, I cut the grooves so each drawer fit tight. Then I sanded the grooves until the drawers slid smoothly.

CUT GROOVES. A dado blade in the table saw works best to cut the grooves. Use a scrap piece to test the width, see Fig. 1. Then set the rip fence so that the grooves are centered on the sides of the drawers.

Now the depth of the grooves needs to be established. The goal is a tight fit with no side-to-side movement. The best way to do this is to sneak up on the final depth, see Fig. 2. (For the sideboard, I started by cutting the grooves just under ¼" deep.)

Test the fit of each drawer in its opening. If it fits too tight (or doesn't fit at all), raise the blade a hair and cut the grooves again. But remember, you'll be cutting both grooves deeper.

SAND GROOVES. When each drawer fits snug in its opening, sand the *bottom* of the grooves until it slides smoothly, see Fig. 2a. But don't automatically sand the full length of the grooves, only the high spots.

Finally, I added wax to both the grooves and the guides.

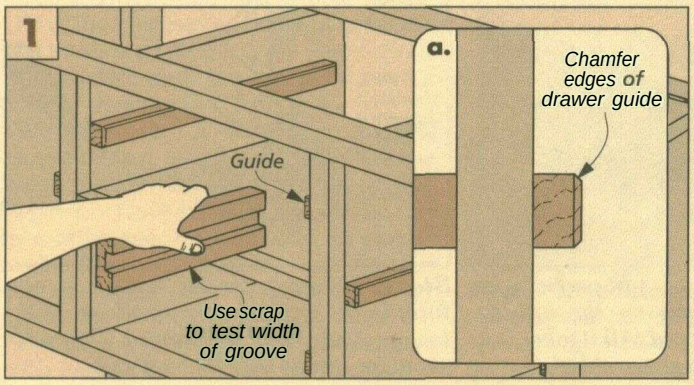

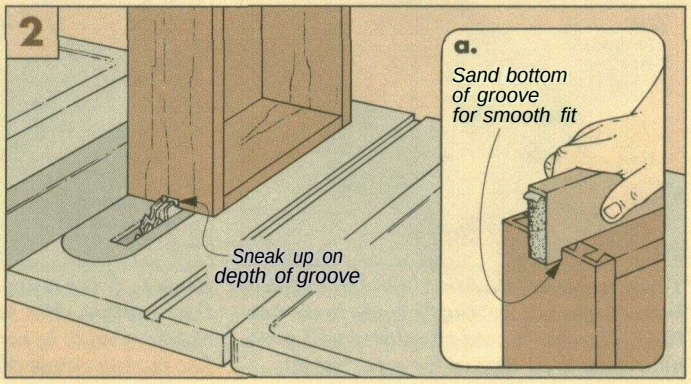

LAY-OUT TOOL

• The idea for this lay-out tool came up as the sideboard was being completed. Steve Curtis (Our shop manager) was preparing to install the plywood back. To hold the back, the plans call for over twenty woodscrews, all spaced evenly around the edge of the plywood. That's a lot of screws to lay out, so Steve decided to make his job a little easier.

To mark all the screw holes the same distance from the edge of the plywood, he mounted a ruler on a piece of scrap, see photo. This eliminated the need for a tape measure.

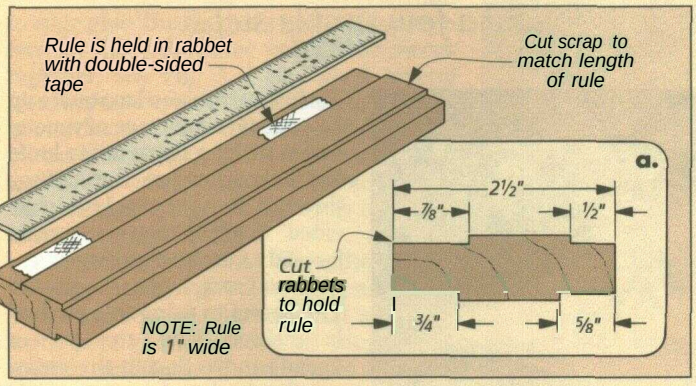

First, Steve cut the piece of scrap to match the length of his 12" shop rule, see drawing at left. (At least 2½" wide.) Then, he cut a shallow rabbet along the edge to hold the rule in position.

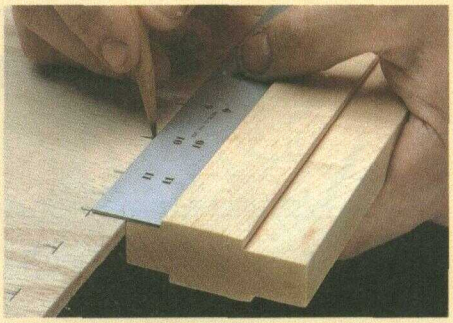

A *A lay-out tool helps when marking many screw holes all inset the same distance. It can be used to mark four different-size insets.*

But Steve cut the width of the rabbet narrower than his rule. That way it overhung the edge of the scrap. And the amount of overhang equaled the inset of the woodscrews.

After I saw Steve's clever marking tool I thought it could be made even more useful. So I cut a rabbet on the other three edges of the tool, see Detail a. This way, the tool can be used to lay out screw holes that require a different inset.

DUPLICATE NOTCHES

• One reason the saw horses on page 26 are so strong is that the top piece is notched. These notches "lock" the legs in place.

But if you're building more than one saw horse, laying out and cutting each notch separately takes a lot of time. To speed up the process, I used the rip fence as a stop.

This has two benefits. First, only one pair of notches ("A" and "B") on one top piece need to be laid out. But also, you don't have to concentrate on cutting exactly on the line each time. Just butt the piece against the fence and make the cut.

The first step is to set up the miter gauge as shown in Fig. 1 on page *27*, with *one change:* The block and fence should not extend beyond the end of the workpiece, see drawing at right.

The procedure to cut each set of shoulders is the same. First, cut inside the mark for one of the shoulders, see drawing. Then before you remove the clamp, slide the rip fence over until it butts to the end of the workpiece. Then lock the fence.

Now, flip the workpiece end-for-end and cut the corresponding shoulder. Repeat these cuts on all of your top pieces.

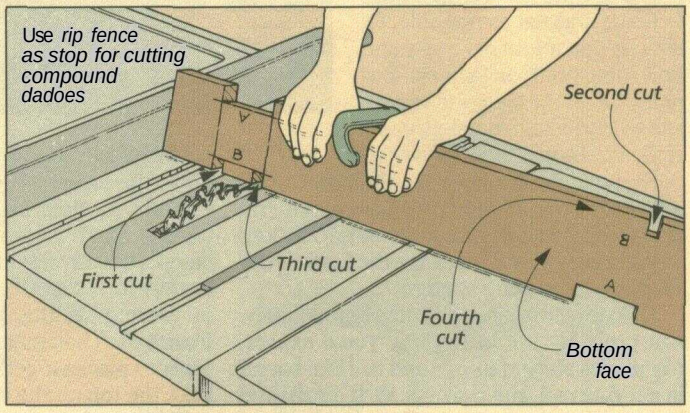

Cut the shoulders for all the "A" notches in all the top pieces (be sure to clean out the waste between the shoulders). Then move the miter gauge and rip fence to the opposite side of the saw blade and repeat the procedure for the "B" notches.

ZERO-CLEARAHCE THROAT PLATE

• A locking rabbet is a great joint for drawers. And cutting the joint is a simple procedure on the router table, see page 23.

The only problem comes when routing the groove across the ends of the drawer front. Because the front is narrow (only 3½" wide), it can tip into the opening in the router table as it's run across the router bit.

To solve this problem, I "closed up" the opening in the table by adding a zero-clearance throat plate to the top of the table, see drawing at right.

The throat plate is just a strip of ¼"-thick Masonite attached to the top of the router table.

To create an opening for the router bit, simply place one end of the strip against the router table fence. Then pivot the strip into the spinning router bit.

To hold the plate in place, I used double-sided carpet tape.

Note: Because the throat plate "raises" the surface of the router table, the height of the bit must be adjusted as well.

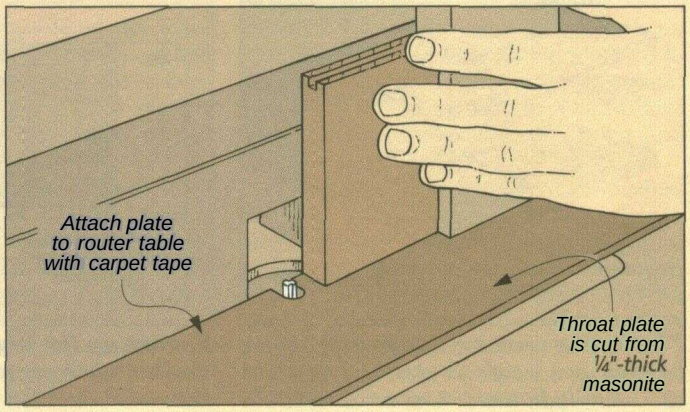

Veneering

Using a fancy, natural veneer is a quick way to give an ordinary piece of plywood a "facelift." All you have to do is follow a few simple steps.

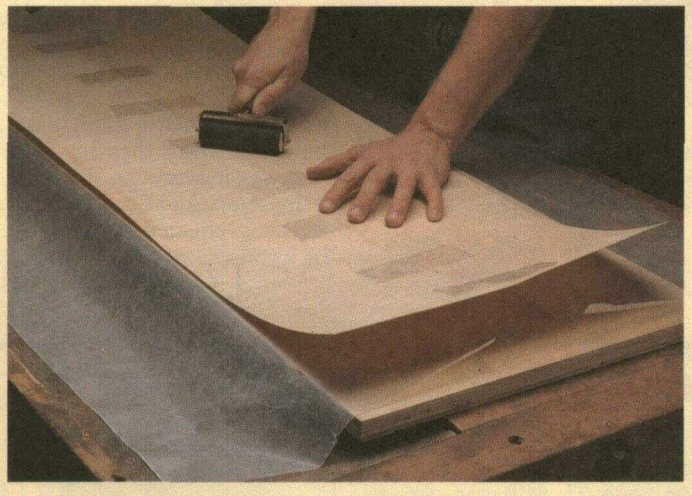

I've worked with veneers quite a bit (mainly the paper-backed variety on small projects). So when I came across some large pieces of curly maple veneer, I thought it would be a good chance to try natural veneer on a large project. (Like the sideboard featured on page 6.)

FLATTENING. Natural, solid-wood veneers are so thin they "memorize" the way they've been stored. So before actually working with veneer, you want to make it as flat as possible. Of course, you might get lucky and find some pretty flat sheets. But many times the pieces of veneer will be curled and cupped, especially the highly figured varieties.

Fortunately, it's not very difficult to flatten veneer. You just have to change its memory. To do that, I'll use a little water. The key word being "little." Just wipe the back of the veneer with a damp sponge.

The veneer will react almost immediately. But probably not in the way you'd expect. My pieces started to curl and roll like bacon in a frying pan. But that's okay. It means the veneer can now be "trained" to lay flat.

To do that, simply sandwich the veneer between two sheets of plywood and weigh down the top, see Fig. 1.

Note: To help absorb any excess moisture, I used brown paper (like grocery bags) between the pieces.

TRUING THE EDGE. Natural veneer comes in varying widths, usually nothing wider than 12". That means you'll need to join (splice) pieces together to cover wide areas (like the top on the classic sideboard).

The goal is to end up with a tight-fitting, nearly invisible seam between the pieces. To do that, you need to square up an edge on each piece of veneer. I tried using a sharp utility knife and a straightedge. But halfway through the cut the knife "decided" to follow the veneer grain instead of the straightedge.

Then I switched to the jointer. The secret to using this method is making sure the veneer doesn't move during the entire cut. To do that, I used a couple scrap 1x6s and clamped the veneer between them, see Fig. 2.

But I couldn't just run the boards through the jointer. The clamps holding the boards together hit the fence. So I carpet-taped an auxiliary fence to the jointer bed for clearance, see Fig. 2.

With the auxiliary fence in place, I ran the boards and veneer over the jointer, checking for chipout after each pass. One of my pieces had a small knot located on the jointed edge. So I used a knife to cut off a strip of veneer removing the knot. Then finished squaring up the pieces on the jointer.

JOINING THE VENEER. Once the veneer edges are square, they can be joined together. But there was a problem. I planned on using contact cement, and it bonds im-

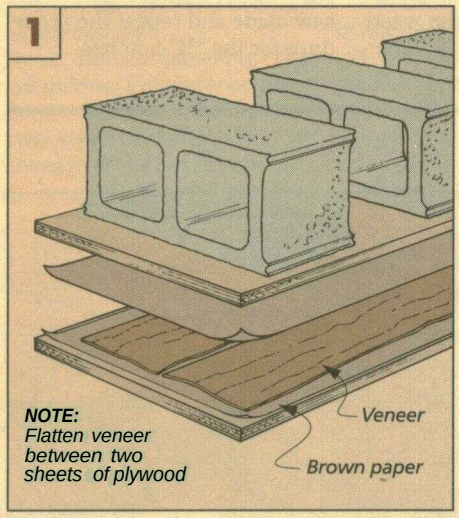

Flattening veneer. *Pressing the veneer between two weighted sheets of plywood will usually flatten the veneer overnight.*

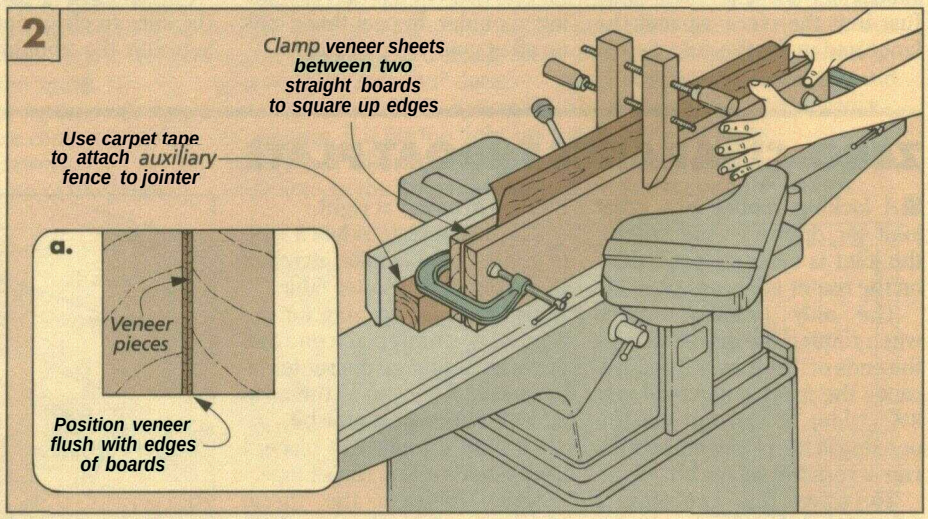

Square up the edges. *Square edges are needed to join veneer pieces for an invisible seam. Run the scrap boards with veneer in the middle across the jointer. Make as many passes as needed until the jointed edges are free from chipout.*

mediately. That makes it difficult to butt the pieces together for an invisible seam without getting them stuck to the core. (The core is what the veneer will be glued to.) So I tried something a little different. I edge glued the veneer pieces together first.

The pieces of natural veneer that I was using were 1/28"-thick. Now I know you're probably thinking that the veneer is too thin to edge glue. But there is a wide enough surface for the yellow glue to hold the pieces together, see Fig. 3. I also used several pieces of tape to hold the seam tight until the glue dries, see Fig. 4. By "walking" my fingers down the joint, I closed the seam while taping the pieces together. Note: Using clear strapping tape made it easy for me to check for a tight seam.

PREPARING THE CORE. While the glue on the edges dried, I got the core piece ready. There are several materials that will work for a core piece as long as they're flat, smooth, and stable. (I used maple plywood, but medium density fiberboard or high density particleboard will also work.)

To prepare the core, I simply cut it slightly larger than the piece of veneer. But you need to keep one thing in mind. When adding veneer to plywood, what you're really doing is adding another ply. So it's best to cut the plywood core so the grain of the veneer will run across the grain on the plywood when it's glued down. This keeps the panel stable.

Note: If your veneered panel won't be held in a frame (like the sides of a cabinet), it's also a good idea to put veneer on both sides to keep the core from warping. But if you veneer both sides, you'll have to cut the core to finish size now. The overhanging veneer will be trimmed flush later.

GLUING UP. Now I was ready to glue the veneer to the core. I used a contact adhesive so I could eliminate all the clamps and fixtures that you need with other kinds of glue. Contact adhesives come in two types: solvent-based and water-based.

I tried the water-based adhesive first. It looked promising: no fumes and easy cleanup. But there was a problem. The water in the adhesive made the veneer expand. Then as the water evaporated and the veneer dried, the pieces shrank back to original size. So my nice tight seam would always open up.

To solve this problem, I switched to a solvent-based contact adhesive. The solvents don't expand the veneer which eliminates the problem with shrinkage. Applying the adhesive is easy. Just use a foam brush and spread an even coat on both the core and the veneer. After it's dry (usually 15 minutes), I applied a thin second coat over the first.

INSTALLATION. Once the second coat of glue is dry, the veneer can be attached to the core. The thing to keep in mind is that contact adhesive bonds instantly. So you want to position the veneer *exactly* where you want it the first time.

To help me get things lined up, I put sheets of wax paper between the veneer and core. That way, you can slide the veneer around until it's in position. Then slip the sheets out from under the veneer as you press it into place.

For a good bond, the veneer needs to be pressed down firmly. To do that, I used a hard rubber roller and rolled the entire veneer sheet. By starting at the joint line and working toward the sides, any air bubbles under the veneer get squeezed out.

CUTTING TO SIZE. Once the veneer has been attached to the core, you can immediately cut the panel to size. I used the table saw to cut my oversize panel to finish size, see Fig. 5. I found using a blade with at least 50 teeth kept chipout to a minimum.

Note: If both sides of the panel have been veneered, the table saw method won't work. Instead, use a flush trim bit in your router. That way you can trim both sides without breaking the veneer that overhangs the edges, see Fig. 6.

FINISHING. The veneer can be finished like solid wood. I sanded my panel first to make sure any contact adhesive or fingerprints were removed. But remember not to sand for too long in one spot (especially with a power finish sander). It doesn't take much to sand through the thin veneer.

Finally, stain and varnish the veneer like you normally would for any project. ❑

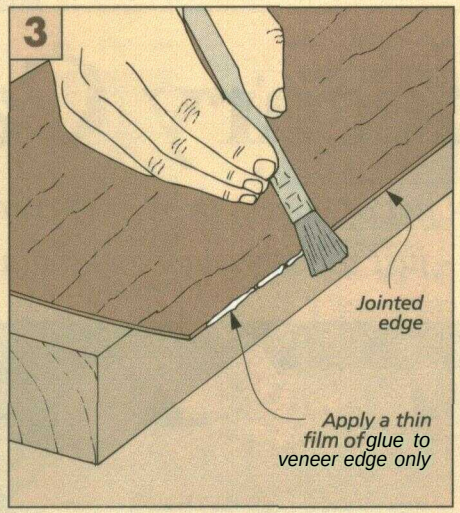

Edge gluing veneer. *Use a brush to spread a thin film of glue along the jointed edges to hold the veneer pieces together.*

Joining the pieces. *As the veneer pieces are butted together, use clear strapping tape to "clamp" them until the glue dries.*

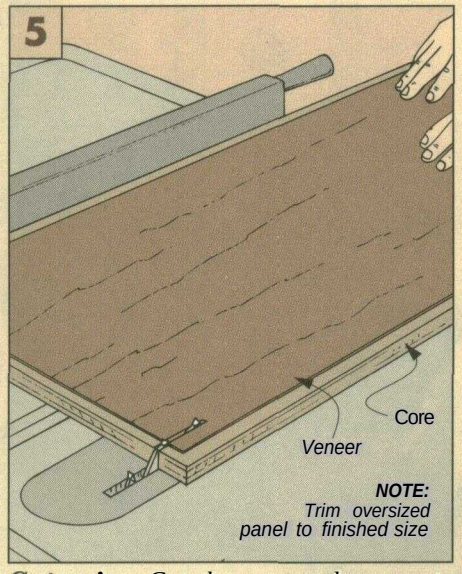

Cut to size. *Cut the core and veneer to size on the table saw. A fine tooth blade reduces chipout— especially on crosscuts.*

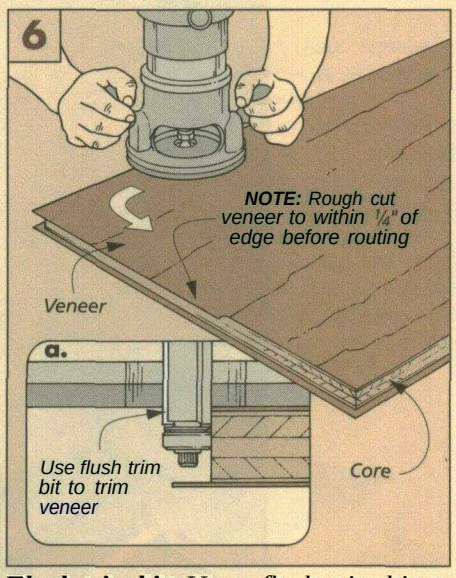

Flush trim bit. *Use a flush trim bit to trim the overhanging veneer flush with the core. Rout in a counterclockwise direction.*

Apothecary Cabinet

To build this box full of boxes, there's no complicated joinery to worry about — just rabbets, dadoes, and a few basic setups.

There's a certain fascination with drawers. For many people it's "What can they hold?" In the case of this apothecary cabinet, just about anything smaller than a shoe.

But the drawers might raise a different question from a woodworker. Such as "How do they work?" Or, "How are they built?" The answer to both questions is the same — very simply. The drawers fit in the cabinet with no special hardware. And they're built in a low-tech way, too.

SIMPLE JOINERY. The joinery used on the drawers is the same joinery that holds the entire cabinet together — rabbets and dadoes. They're a couple of the most versatile, and basic, joints in woodworking. Just a step up from butt joints.

Even though dadoes and rabbets are simple to cut, they must be cut perfectly. That's because when the whole cabinet is assembled there are no screws or nails to reinforce the joints. Just glue. Plus, the joints will be visible.

FINISH. Ordinarily when I build a project using cherry, I leave the wood unstained. But this project was different, and the reason was the knobs. The knobs I thought looked best for the drawers weren't available in cherry, only birch. And if you've ever tried to stain a light wood (such as birch) to match a darker wood (cherry), you know what a challenge it can be.

Instead of trying to match the natural color of the drawer fronts, I stained the knobs a *darker* color. Then, for contrast, I stained the rest of the cabinet the same color as the knobs.

PREPARING THE PANELS

I cut the parts for most projects only when I'm ready for them. But sometimes there's a good reason to cut the parts in advance. On this project, the reason is the joinery. The parts fit together with dadoes and rabbets, see the exploded drawing below. So they must start out the same thickness, then the joints can all be cut the same.

I started by gluing up an oversize blank for each of the parts. Note: The drawings at right *show finished* dimensions for each of the pieces.

THICKNESS. Before cutting the blanks to finished size, they should all be planed to the same thickness (3/4"). And to ensure good-fitting joinery, it helps to check the thickness of each part in a test dado. I cut this dado using a 3/4" straight bit in the router.

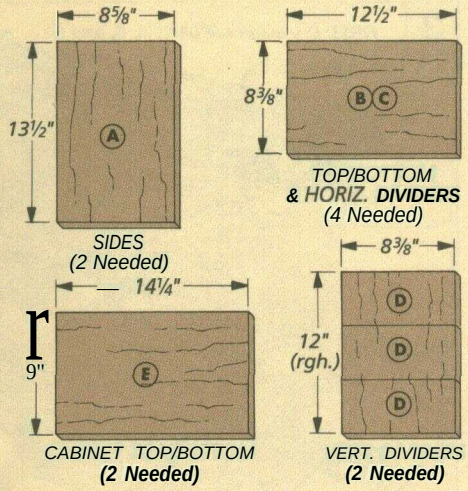

MATERIALS

A	Case Sides (2)	¾ x 8⅝ - 13½
B	Case Top/Bottom (2)	¾ x 8⅜ - 12½
C	Horizontal Dividers (2)	¾ x 8⅜ - 12½
D	Vertical Dividers (6)	3/4 x 8⅜ - 3¾
E	Cabinet Top/Bott. (2)	¾ x 9 - 14¼
F	Cabinet Back (1)	12½ x 13½ - ¼-ply
G	Drawer Sides (18)	½ x 3 7/16 - 8⅛
H	Drawer Backs (9)	½ x 3 7/16 - 2 15/16
I	Drawer Fronts (9)	¾ x 3 7/16 - 3 7/16
J	Drawer Bottoms (9)	2⅞ x 79/16 - ¼ ply

HARDWARE

- 1" dia. Birch Knobs (9)

DADOES & RABBETS

After the panels have all been planed to the same thickness, the individual parts (A, B, and C) can be cut to finished length and width, see drawings above.

Note: Set aside the blank for the vertical dividers (D) and the top/bottom blanks (E) until later on.

DADOES & RABBETS. When the case parts have been cut to finished dimensions, the dadoes and rabbets can be cut.

Note: Because these cuts will be visible on the front of the cabinet, you want the bottoms to be perfectly flat and the sides square. So I used a ¾" straight bit in the router table, see Figs. 1 and 2. A stack dado set will also work, but only the very best will cut as accurately as a straight bit.

SEQUENCE. All the dadoes and rabbets can be cut with the same router bit. But there are a number of different router table setups needed.

CASE SIDES. First I routed the rabbet on the top and bottom of the sides (A), see Detail a below.

Next, I routed the dadoes across the sides, see Detail b. These are critical cuts. With the fence adjusted to the proper distance from the router bit (4¼"), the dadoes on each workpiece will create equal-size openings when the cabinet is assembled, see Figs. 1, 2 and drawing below.

The third setup is for cutting a rabbet to accept the plywood back. For this, the router table fence must be repositioned to rout a ¼"-deep rabbet on the back edges of the side pieces (A), see drawing below.

TOP & BOTTOM. Now the case sides can be set aside for a moment. Then, lower the router bit to cut the remaining dadoes on the case top/bottom (one side only) and horizontal dividers (both sides), see Detail c.

Next, I moved on to the dividers.

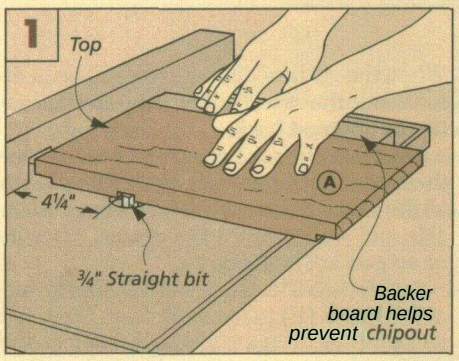

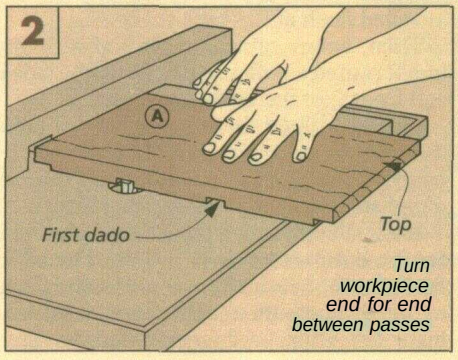

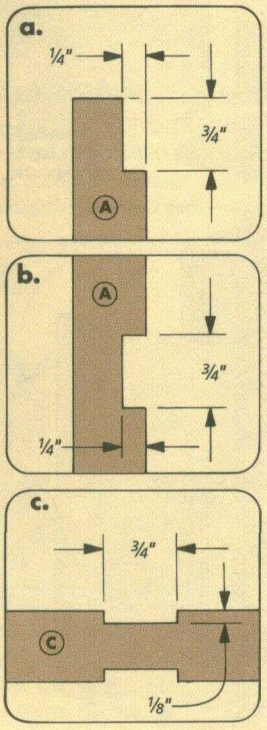

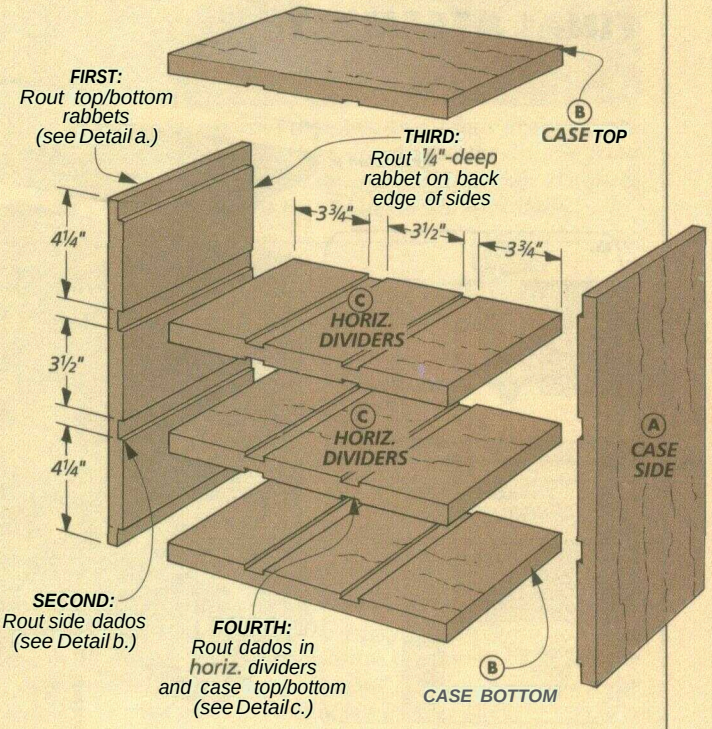

VERTICAL DIVIDERS

After the dadoes and rabbets have been cut on the case parts, the pieces can be dry assembled to test the fit. Note: The parts should be assembled so they're all flush across the front of the assembly. And the back edges of the horizontal pieces (the top/bottom and horizontal dividers) should align to the inside edge of the rabbets cut for the plywood back, see drawing below.

VERTICAL DIVIDERS. Now, work can begin on the vertical dividers. The first thing to do is rip the blank for the dividers to finished width (the same width as the horizontal dividers, 8⅜"), refer to the drawing at the top of page 21.

Now the **dividers (D)** can be cut to finished length (height). But instead of cutting each piece in one pass using the miter gauge on the table saw, I did something different. (Again, the reasoning was to cut all the dividers *exactly* the same length.)

First, measure between the bottoms of each pair of dadoes. Then cut each blank into three oversize pieces (slightly longer than the dado-to-dado height). Note that the grain runs vertically on the assembled dividers, see Fig. 4.

Now the dividers can be cut to finished length by trimming the slightly-long blanks one at a time using the table saw in conjunction with the rip fence, see Fig. 5.

Safety Note: I don't ordinarily cut a workpiece to length using the rip fence. But since the widest edge of the piece is against the fence, the procedure is as safe as an ordinary rip cut. Even though the piece is being cut to finished length.

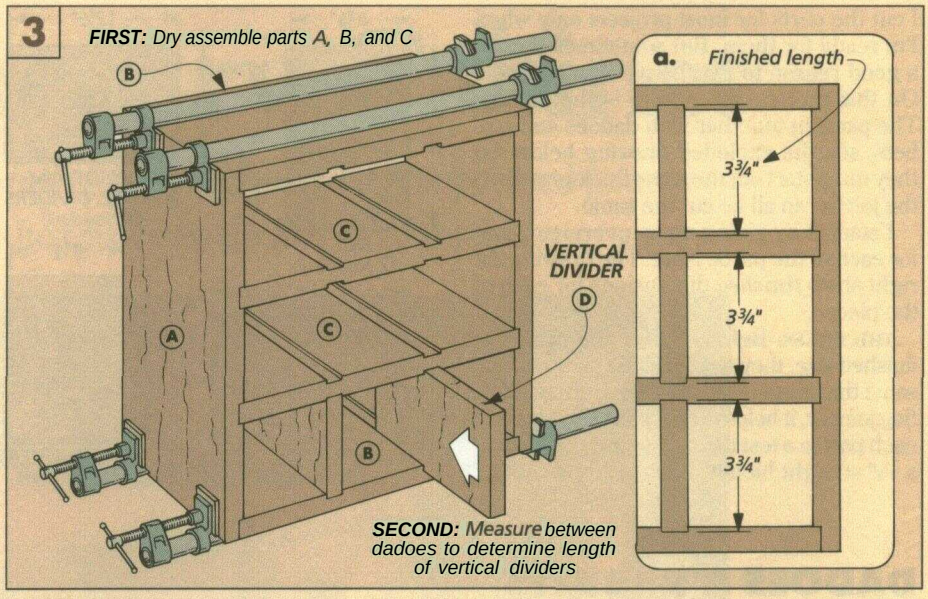

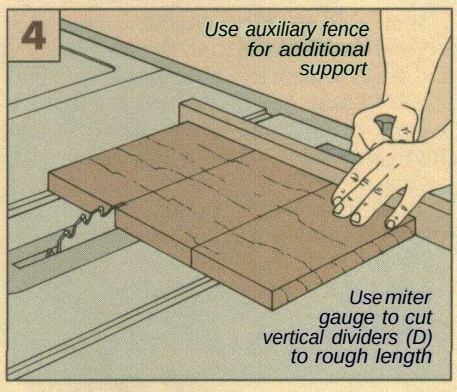

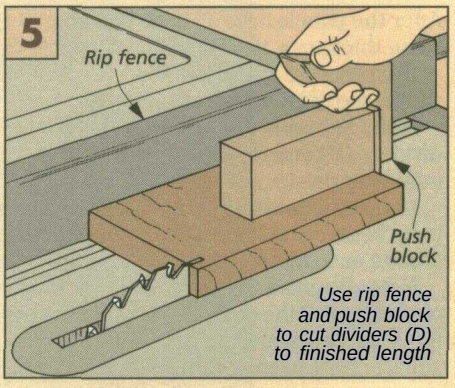

FINAL ASSEMBLY

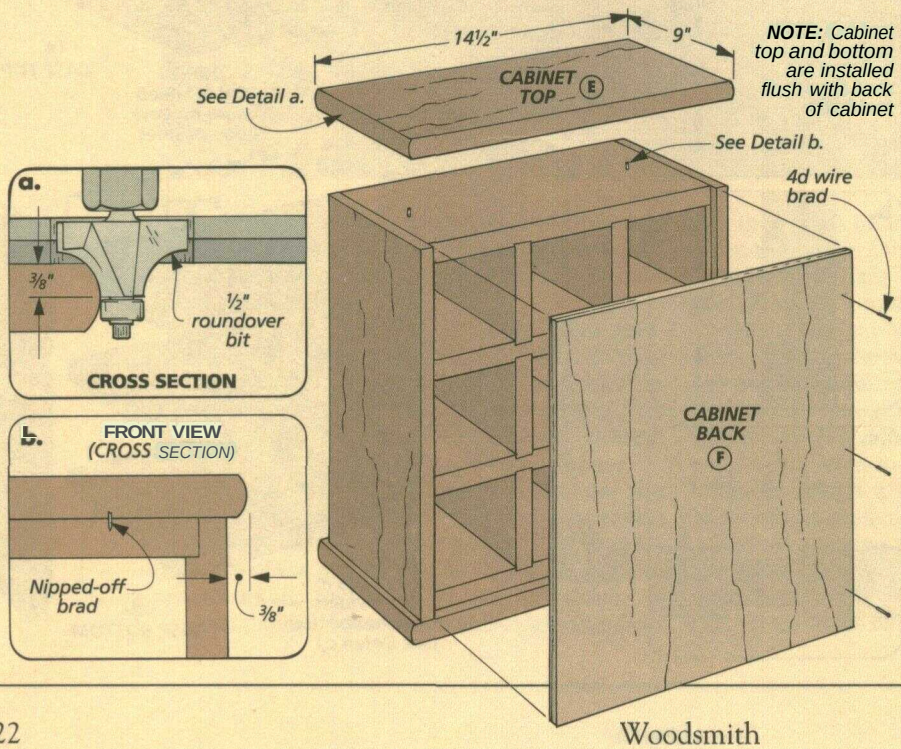

When the vertical dividers have all been fitted inside the case, I added a top and bottom then a plywood back.

ASSEMBLY. First, I disassembled the case then put it back together again with glue in all the joints. It's easiest to start from the outside and work toward the center. No nails or screws are necessary.

TOP & BOTTOM. Next, cut a **cabinet top and bottom** (E) to fit on the case. Note: Cut these pieces to create a ⅜" overhang on the front and sides, see Detail b. (They will be installed flush at the back of the case.)

Then, before attaching the top and bottom, I routed a bullnose profile on the sides and front (not the back), see Detail a.

Finally, I glued the top and bottom onto the case. A couple nipped-off brads keep the panels from slipping around when they're glued and clamped in place, see Detail b.

BACK. Finally, cut a piece of ¼" plywood for the **cabinet back (F)**. Note: The back fits in the rabbets in the case sides, and flush to the top and bottom of the case, see drawing at left. Short brads secure it to the case.

DRAWERS

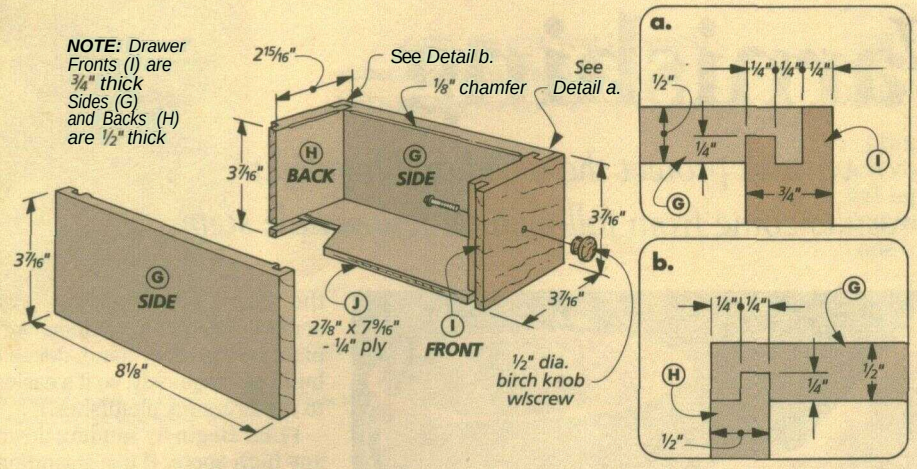

LOCKING RABBET

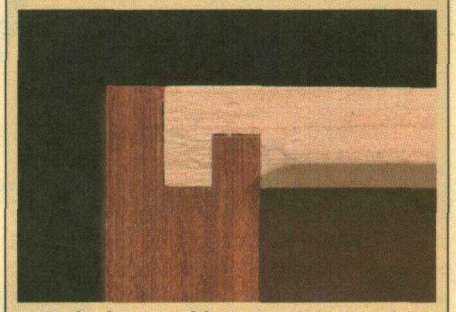

A locking rabbet joint connects a drawer front to the drawer sides. It's a strong joint that can be cut with just three setups on the router table (see below).

What makes this cabinet useful are the drawers. And they're all made the same way in a series of repetitive cuts. A locking rabbet joint holds the parts together, see photo.

CUT TO SIZE. The key to making multiple drawers is the setup. If the drawer openings are all the same size (3½" square), the parts for the drawers can be cut the same size, too, see exploded drawing above.

Note: The **drawer sides/backs (G, H)** are cut from ½"-thick stock, and the **drawer fronts (I)** are cut from ¾"-thick material.

When all the drawer parts have been cut to finished size, work can begin on the locking rabbets joints.

DRAWER JOINTS. There are just a few simple steps required to make the joints for the the drawers. And the cuts can be made with three different setups using a ¼" straight bit in the router table, see drawings below.

Note: For the best fitting joints, it helps to start with test cuts on a piece of scrap wood.

Finally, I routed a narrow chamfer around the top inside edge of the drawers, see photo.

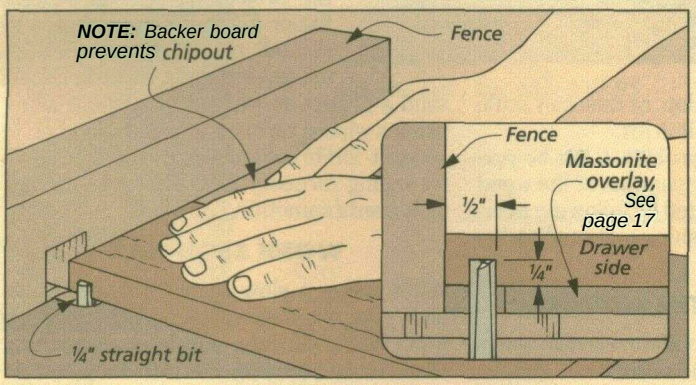

1 *The first cut to make is a dado on the drawer sides. Start by setting up the router table with a fence and a ¼" straight bit, see detail. Check the setup with a cut on a test piece. Now rout a dado across both ends of each piece with the inside facing down.*

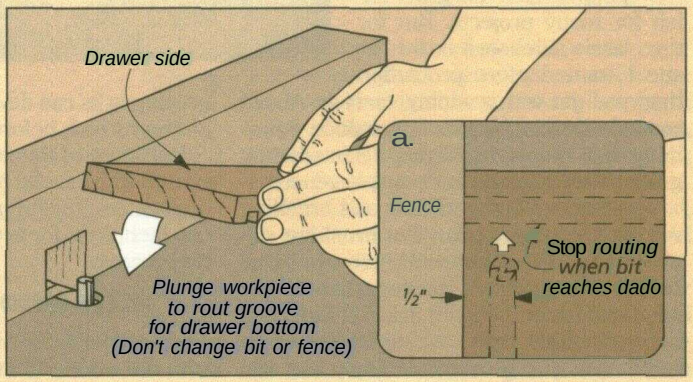

2 *With the smae set up, rout a groove on all four drawer parts for the plywood drawer bottom. First rout the drawer front and back. For the groove on the drawer sides, plunge the piece onto the bit and rout from the front dado to the back dado.*

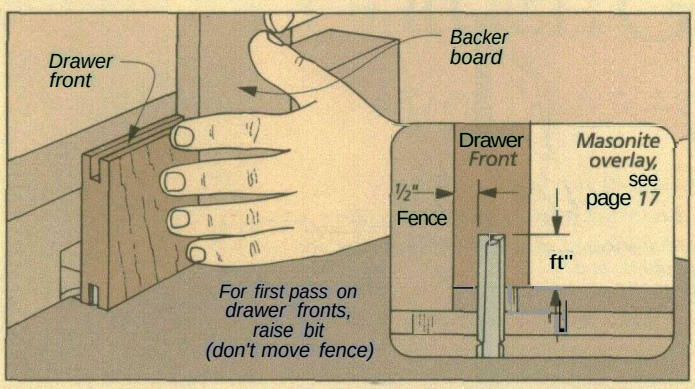

3 *Next, tongues are routed on the drawer front and back to fit in the grooves in the sides. To do this, first raise the height of the bit, but don't move the fence. Then hold the drawer front on edge and run it over the bit, flipping the piece between passes.*

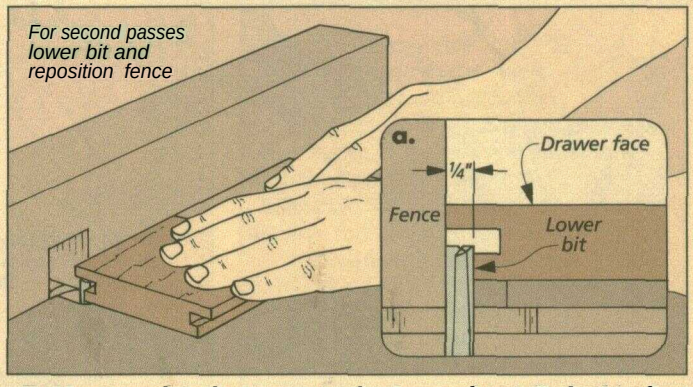

4 *Now complete the tongue on the drawer front. To do this, first lower the router bit and reposition the fence. Then lay the piece down and trim off the lower tongue. Finally, using the same setup, rout a tongue on both ends of the drawer back.*

Varnishing

Built-up layers of varnish protect the wood and highlight the grain. The best results come from following a few simple steps.

A special project deserves a special finish. That's how I felt after deciding on curly maple for the sideboard on page 6.

A project that may be heavily used needs extra protection. And if it's built with a dramatically figured wood, you want to show it off. Perfect reasons to finish the sideboard with built-up layers of brushing varnish.

Wait a minute, Don. I know about varnish ... it's a sticky, gooey, bubbly mess. Why not just use a wiping varnish like you normally do? Good question.

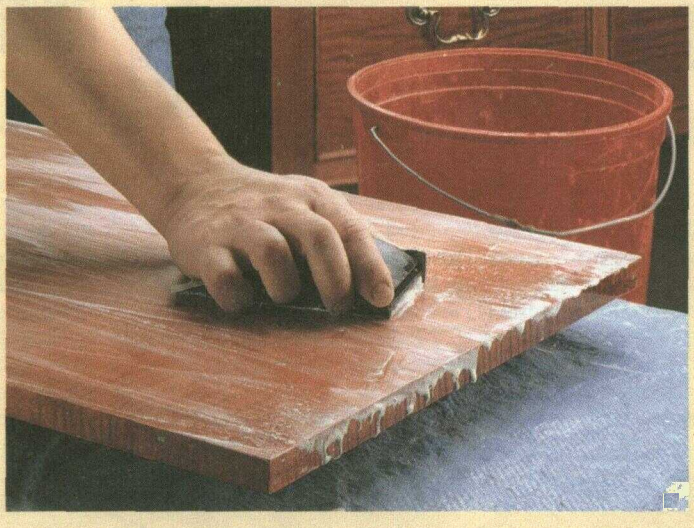

Wiping varnish is a great finish for many projects. But for the classic sideboard in this issue I wanted more protection than you get with a wiping varnish. Also, I wanted a deeper, glossier appearance. Something that would highlight the interesting grain patterns in the curly maple veneer.

WHAT IT IS. Wiping varnish and brushing varnish are very similar. But brushing varnish has a higher concentration of oil and solids. This makes it thicker when it's applied and harder when it dries. It builds up in layers rather than soaking in. By adding more coats you get more build-up and also more protection.

HOW IT WORKS. But there are drawbacks. More oil and more solids make brushing varnishes slower to dry (cure). So drips and brush marks can develop, or dust can settle on the varnish before it dries.

But most of these problems can be prevented with careful preparation of the wood in advance. Or eliminated by following a certain technique for brushing and sanding between coats.

PREPARING THE SURFACE

A successful finish of built-up varnish starts with the wood. And the objective is simple: flat and smooth. It's the same as any project, but after the layers of varnish begin building, small imperfections tend to become magnified. And then you must go back to the bare wood to fix any scratches or dents. (Wiping varnish, on the other hand, doesn't build up as quickly, so it's easier to repair minor blemishes.)

FLAT. Begin by sanding down any high spots. (I use a sanding block with 120-grit paper.) And if the project has been built using an open-grain wood, such as oak, mahogany, or walnut, use a paste wood filler to fill the pores. Note: The sideboard in this issue was built using maple, so no filler was needed.

SMOOTH. After all surfaces of the project have been sanded flat or filled, the next step is to smooth the surface. But when using a brushing varnish, I don't sand a project as smooth as I would when using a wiping varnish. (I usually sand up to 180-grit for brushing varnish and 220-grit for wiping varnish.) That's because the varnish needs something to grab onto.

WORK SEQUENCE

When using a slow-drying finish like varnish, your worst enemy is dust. So it pays to think like a surgeon and keep everything clean. Isolate the project from everyday traffic. Give the finishing area a thorough cleaning. Then eliminate all sources of dust. Also, give the project itself a good wipe-down with a cloth dampened in mineral spirits.

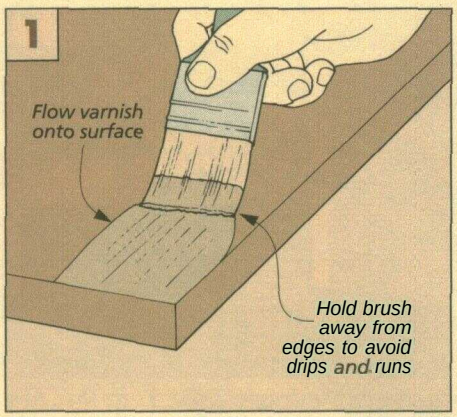

Flow on. *Load the brush with varnish about halfway up the bristles. Then spread a thin coat over the entire surface.*

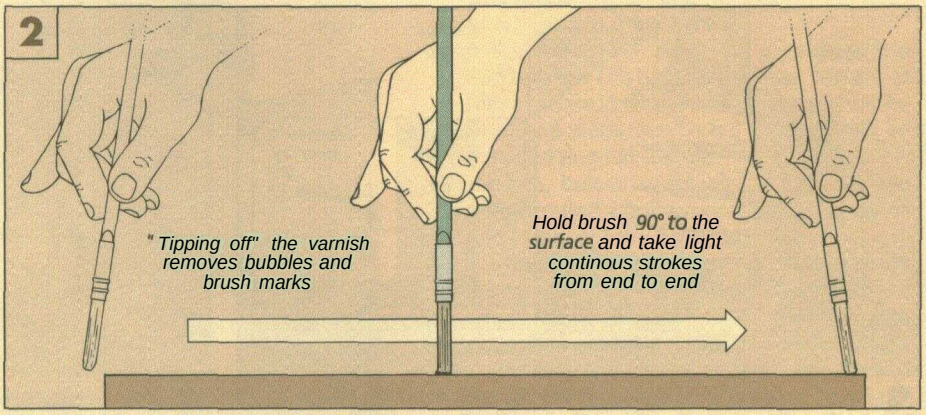

Tip off. *Now level out the varnish and eliminate any blemishes. Hold the brush straight up and down and take light passes using just the tips of the bristles. Don't lift the brush in the middle of a stroke, and don't over-brush the surface.*

After the surface has been prepared, the project can be stained or dyed. (For the classic sideboard I used aniline dye, refer to the box on page 12.)

BRISTLE BRUSH. There's one tool that can make or break a varnish job and that's the brush. In the past I've had good success with a disposable foam brush. But for a larger project such as the sideboard, a 2" to 3"-long China bristle is perfect. It will hold more varnish and distribute it more evenly than a nylon bristle or foam brush.

WASH COAT. Now a "wash coat" of varnish can be applied. I used Behlen's 4-Hour Rubbing Varnish (Gloss) diluted fifty percent with mineral spirits. (Any good brushing varnish will do.) This diluted first coat will penetrate the wood pores and dry faster than a full-strength coat of varnish.

To prepare the wash coat, I use a paper strainer (or cheese cloth) to strain some of the varnish into a container with an equal amount of mineral spirits. This prevents any globs or "skin" in the original container from getting on the brush or the project.

Now, start by flowing the varnish onto the project. The object is to spread the varnish evenly over the entire surface of the project. Use overlapping strokes in the direction of the grain to spread and level the varnish. Note: It helps to hold the brush at an angle while flowing on the varnish, see Fig. 1.

Then, to blend in the brush marks and remove air bubbles, hold the brush straight up and down to "tip off the surface. This involves taking long, light brush strokes from one end of the piece to the other, see Fig. 2. After tipping off the surface, stop brushing — too much will cause more brush marks.

Now let the project dry for at least 24 hours (depending on the temperature and humidity in the finish room). The more time the varnish has had to cure, the harder it becomes. And the easier it is to sand.

WET SAND. After the first coat has dried, I like to wet-sand lightly with 400 wet/dry paper, see photo on page 24. Again, use a sanding block. Note: If the sandpaper starts to clog up with gummy varnish, let the varnish dry some more.

The goal while wet-sanding is to bring down any high spots and remove any remaining bubbles and brush marks, see top photo at right. This is the messy part of using a brushing varnish. But it's also one of the most important.

The sanding slurry that develops will even out the surface so the next coat of varnish goes on smoother and flatter.

Caution: Don't sand too heavily or you may cut through the stain. But don't panic if you do. A small bare spot can always be touched up, see bottom photo at right.

Also, while you're sanding check the vertical surfaces for drips and runs. They're almost unavoidable but easy enough to clean up. But before sanding them, scrape off the drips with a cabinet scraper.

TACK CLEAN. After a quick once-over with the sandpaper, stop and examine the surface. Hold a bright light to the back of the project and sight across the surface from the front. This will highlight the high and low spots. Then use a clean tack cloth to remove all the sanding dust.

ADDITIONAL COATS. Now begin building up the layers of varnish with several full-strength coats. Here the object is to level out the entire surface and build the depth and protection. You want the varnish to flow on smooth and build up in consistent, thin layers. With fewer and fewer blemishes.

Now the procedure becomes repetitive. Apply another coat, building up the layers and filling in the low spots. Let dry, sand with wet/dry paper, tack clean, then build up again. The whole time your goal is a smooth flat surface that's free of blemishes.

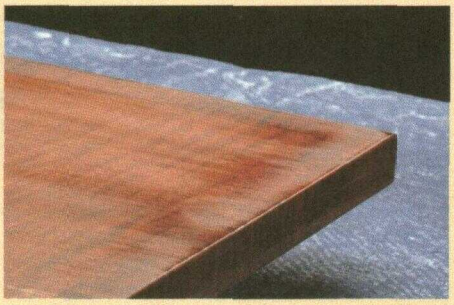

Low spots. *After wet-sanding, high spots in the finish show up as dull areas. Sand until the low shiny areas become dull too.*

Touch-up. *When sanding between coats, it's possible to cut through the stain. Use a small sponge "dabber" as a touch-up tool.*

How many coats of varnish are enough? For surfaces that receive little wear, like the base on the sideboard, two full-strength coats is plenty. For heavily used surfaces, like the top, I apply at least four full-strength coats. Sometimes even more.

When the varnish dries smooth and flat, I'll put on one last coat. But first do a final sanding with 600 wet/dry paper.

For a deep shine, I use gloss varnish for each coat. Then I rub it out after it has cured for several days, see below. Note: If you prefer less shine, switch to semi-gloss varnish for the last coat and don't rub it out. ❑

RUBBING OUT THE TOP COAT

The goal with any built-up finish is to get closer to perfect with every additional coat. But you have to stop somewhere. And when you do, there will probably still be some small blemishes. One good reason to "finish the finish."

PUMICE. The safest way to remove the few remaining blemishes is to rub out the finish with pumice. Pumice is a finer abrasive than wet/dry sandpaper. It comes in powder form in several grits. (I used 000.)

Like any fine abrasive, pumice should be used with a lubricant (water works fine). The best tool for applying the pumice is a felt block, see photo at left. It's soft and flat and works like a sanding block.

Start by wetting the block. Then sprinkle a little pumice on the surface. Now, rub the pumice into a slurry over every surface of the project. Wipe away the slurry with a clean soft cloth and repeat if any blemishes are still visible.

ROTTENSTONE. The second reason to rub out a finish is the shine. After rubbing out the blemishes, the surface of the sideboard looked a bit dull. So I went a step further to bring back an even gloss finish. Rottenstone was the answer.

Rottenstone is a powder finer than pumice. But it's used in the same way, except with a different felt block The level of gloss just depends on the number of rubbings.

Sawhorses

When I see a sturdy pair of sawhorses I'm always interested in the construction. That's one of the reasons I was impressed with a pair of sawhorses built by Ted Kralicek, our creative director. They'd been around for many years and they were just as sturdy now as when he first built them.

Part of the reason for them being sturdy is the design. They were built with the legs angled in two directions. That way you can work anywhere on the sawhorse (even right up to the ends) without having to worry about it "rearing up."

Also, the design doesn't require a lot of material to make one of these sawhorses. Just four basic parts. A top piece, legs, stretchers, and gussets.

These parts could be cut from standard dimensional lumber like 2x6s and 2x4s. But I didn't do that. Instead, I cut my pieces out of a larger piece of stock (2x12) for a couple of different reasons.

First, a larger board typically has fewer knots and defects to work around. So it's a lot easier to end up with a good workpiece. Second, 2xl2s (at least around here) are usually fir. I wanted this type of wood because it's harder and tougher so it will take more abuse than softer 2x6s and 2x4s.

Note: The materials listed at right along with the instructions given are for building a single sawhorse.

TOP PIECE

I started work on the sawhorse by cutting *the* **top piece (A)** to finished size (5¼" wide x 36" long). Next, I marked the loca-

CUTTING DIAGRAM

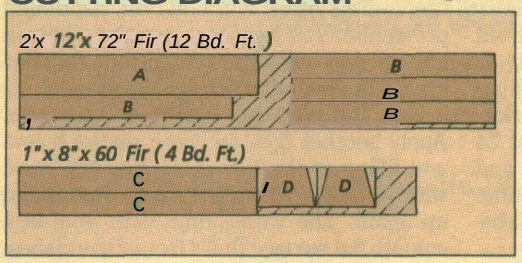

MATERIALS

A	Top Piece (1)	1½ x5¼ - 36
B	Legs (4)	1½ x 3½ x 34 rgh.
C	Stretchers (2)	¾ x 3½ - 40 rgh.
D	Gussets (2)	¾ x 7 - 10 rgh.

- (12) #8 x 2½" FhWoodscrews
- (12)#8 x 1¾" FhWoodscrews
- (16) #8 x 1¼" FhWoodscrews

Note: Materials for one sawhorse

A *The notches cut in the top piece angle the legs outward in two directions. Gussets and stretchers brace the legs to make the sawhorse strong and sturdy.*

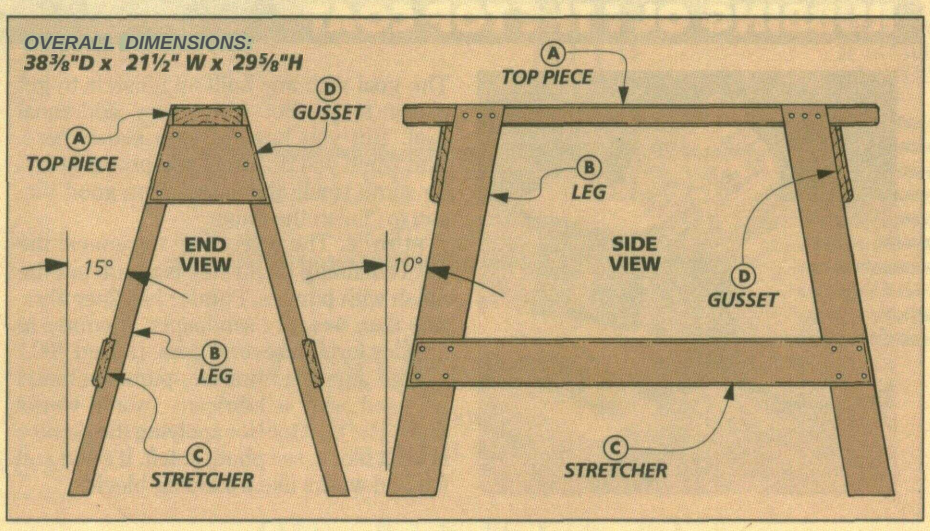

tion of four notches on the bottom face, see mortise layout. These notches in the top piece do double duty. First they "lock" the legs in place so they **won't** move back and forth. And second, they determine the different leg angles.

One of the angles spreads the legs 15° from **side-to-side**. The other angle tilts the legs forward 10° from top to bottom, see drawing at bottom of page 26. Since the legs are angled in two directions, these notches also have to be angled in two directions. This requires cutting compound angles.

BEVELED FENCE. To help simplify cutting the compound angles I added a beveled fence to the miter gauge, see Fig. 1. The bevel tilts the workpiece 15°. This "built-in" angle automatically gives you the correct angle for the spread of the legs.

The beveled fence is easy to make. It's just a piece of 2x4 stock ripped at a 15° angle and screwed to the miter gauge.

Attached to the beveled fence is an auxiliary fence. It backs up the top piece (A) to keep from chipping out the top face. Plus, it's a good place to clamp your workpiece to keep it from moving during the cuts.

The second angle cut in the notches tilts the legs forward. To cut this 10° angle it's just a matter of making an adjustment to your miter gauge.

A quick way to cut these notches is to cut them in pairs. This way you only have to change your setup once. Two notches are cut using the right miter gauge slot and the other two are cut using the left slot. To help me keep things straight, I labeled the notches "A" and "B", see mortise layout.

MORTISE LAYOUT

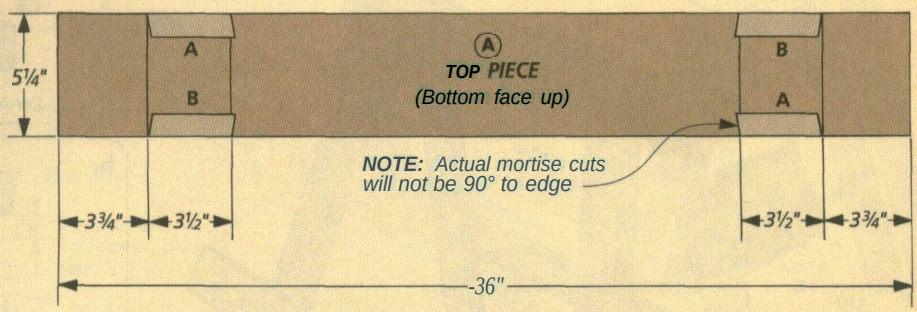

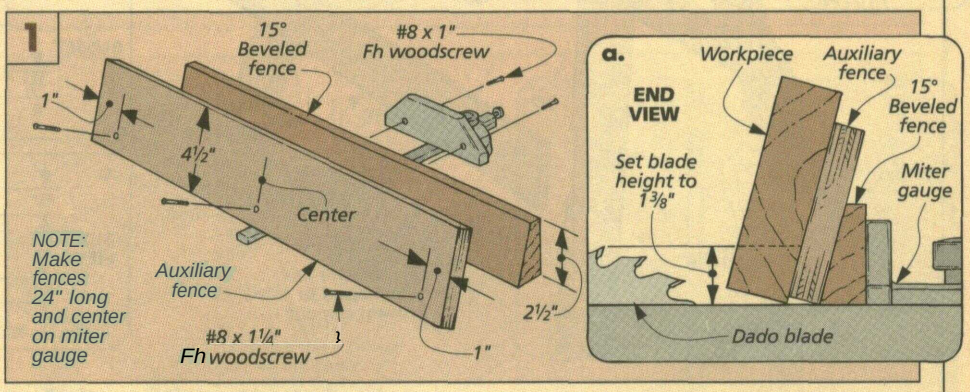

CUTTING NOTCHES. I started cutting the notches by working on the "A" pair. First, I adjusted the dado blade to 90° and then raised it 1⅜" above the table. Second, I moved the miter gauge to the *right* miter gauge slot in the table saw and set the miter gauge to 10°, refer to Fig. 2. Third, I cut to the layout lines on both ends of the notch and then removed the waste in the middle.

When cutting the "B" pair of notches, switch the miter gauge from the right miter slot to the *left* miter slot. Then change the miter gauge to the opposite 10° angle setting before cutting the notches, see Fig. 3.

CHAMFER EDGES. After the notches are cut, I wanted to keep the edges on the top piece from splintering. So I routed a ⅛" chamfer on all of the outside top and bottom edges. Note: Don't chamfer the notches.

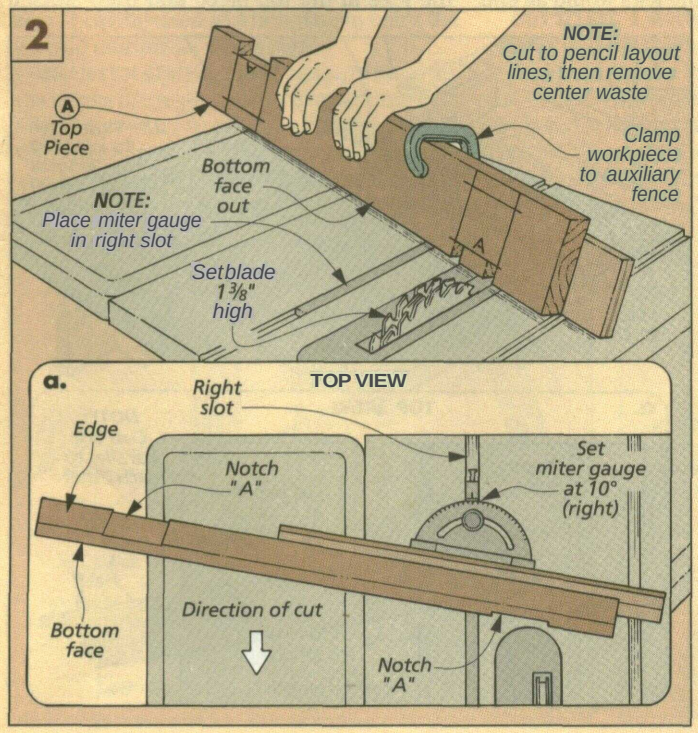

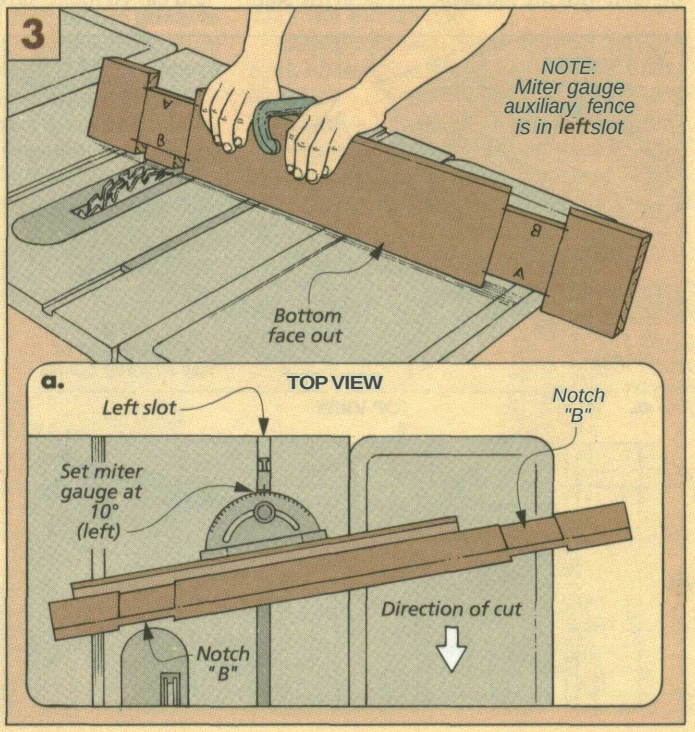

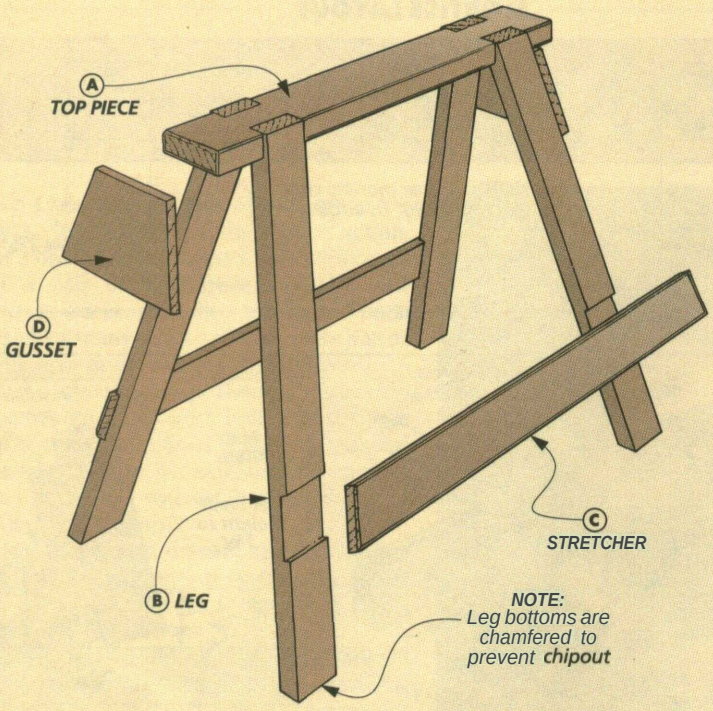

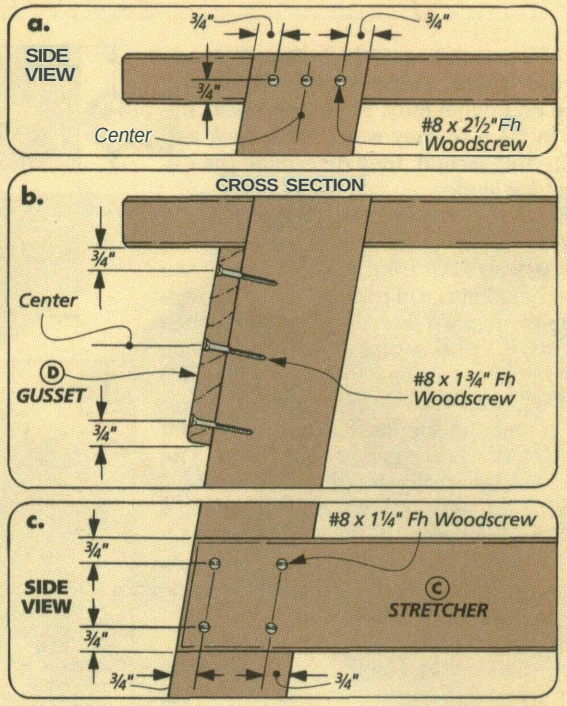

LEGS

Once I had the top piece finished, I started work on the legs **(B).** They're cut from the same 2x12 as the top piece (refer to the cutting diagram on page 26). I ripped them to width to fit in the notches (in my case 3½" wide) and cut them extra long (34").

CUT TO LENGTH. When the legs have been cut to width, the next step is to trim them to length. One end of the leg needs to fit flush with the top piece. While at the same time, the other end must sit flat on the floor, see drawing above.

The first step is simple. Just trim one end on all of the legs. To do that, I tilted the saw blade to 15° and set the miter gauge to 10°, see Figs. 4 and 4a.

After the first angle is cut, the next step is to cut the legs to finished length. To do that, first change the miter gauge to the opposite 10° setting. Then you can cut the other end of the leg to length (31" long), see Figs. 5 and 5a. To make sure the legs would all end up the same length, I used the first leg to help me position a stop block on the auxiliary fence.

LAY OUT NOTCHES. After the legs have been cut to finished length, the next step is to lay out notches for stretchers. Stretchers fit in notches cut in the legs and are used to join the legs together on each side of the sawhorse to keep it from racking.

To help me visualize how the stretchers would fit on the legs, I first dry assembled the legs in the top piece and then labeled

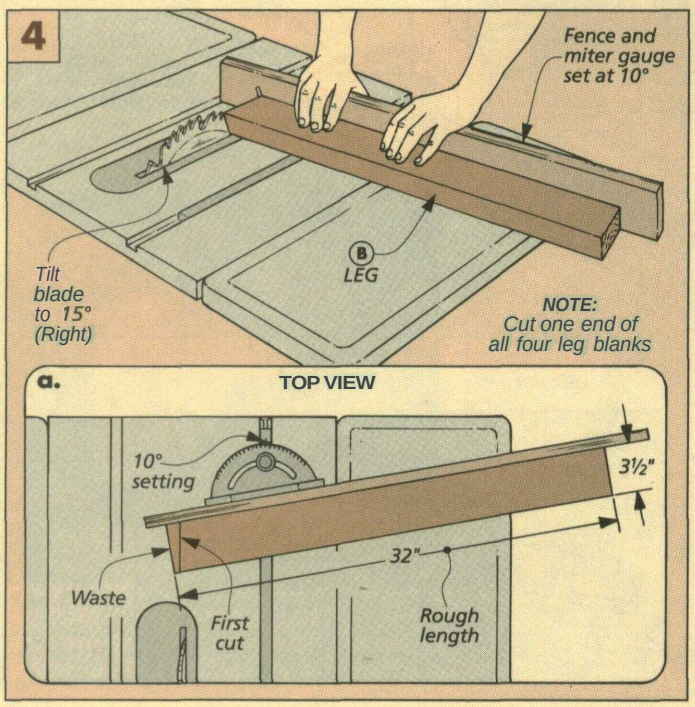

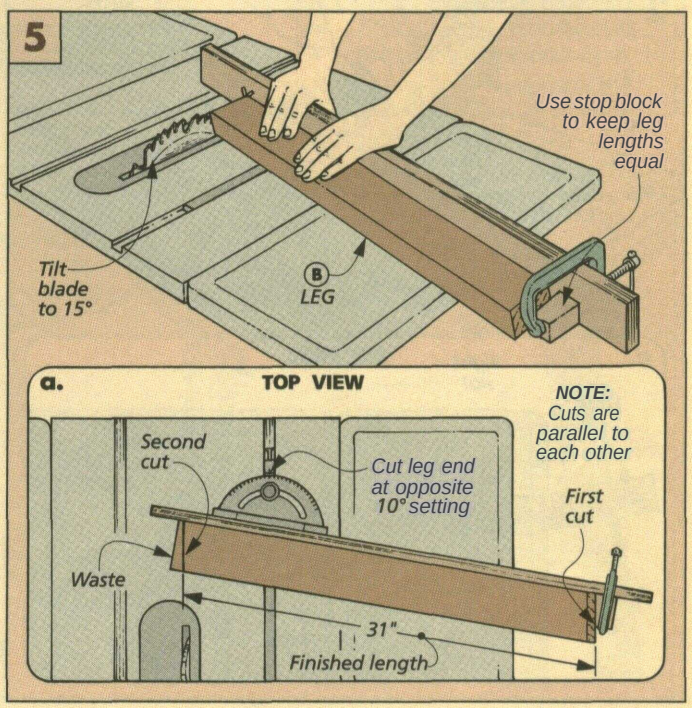

them "A" and "B" to match the letters of the notches. Next, I removed the legs from the top piece and marked the notch location, see Figs. 6 and 6a. Note: Be sure the notches are laid out parallel to the ends of the legs.

CUTTING NOTCHES. Cutting the 3/8"-deep notches for the stretchers is pretty straightforward. First, I installed a dado blade in the table saw and set it to 90°. Second, I adjusted the miter gauge to follow my lay-out lines and then cut out the notches, see Figs. 7 and 7a. Note: The miter gauge setting is opposite for the "A" and "B" legs.

CHAMFER ENDS. Sawhorses are always being slid across the floor. To help keep the ends of the legs from chipping out, I filed an 1/8" chamfer around the bottom edges of all the legs. Then glue and screw the legs to the top piece, refer to Detail a in the drawing at the top of page 28.

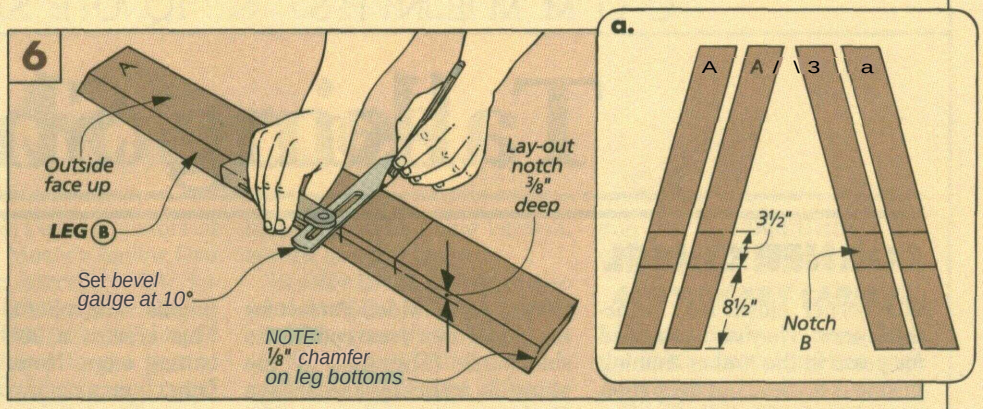

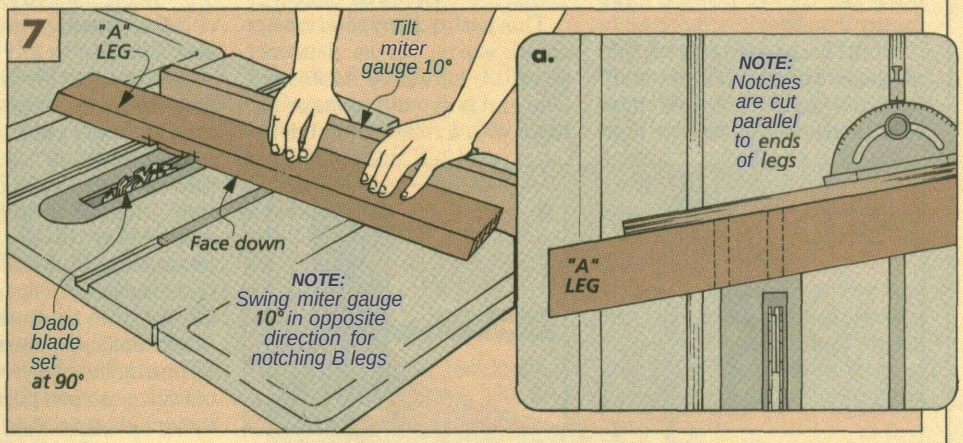

STRETCHERS

After the legs have been installed in the top piece, the next step is to cut the stretchers to fit on the legs.

CUTTO FIT. Just like cutting the legs, I first ripped the stretchers (C) to finished width to fit tight in the notches in the legs. But I left them a little long (40"). I used the extra length to make cutting the stretchers to finished length easier.

That's because you can use the legs to mark the stretcher length for an exact fit. To do that, I first cut an angle on one end of the stretcher so it would fit flush with the edge of the leg, see Fig. 8. Then I used the other leg as a guide to mark the length of the stretcher and cut it to size.

After the first stretcher is cut to finished size, it can be used as a template to mark the second one for an exact copy.

CHAMFER EDGES. Once again, to keep the the edges of the stretchers from splintering, I used my router to cut an 1/8" chamfer along the outer edges of the stretchers. Then glue and screw the stretchers to the legs, refer to Detail c in the drawing at the top of page 28.

GUSSETS

The last pieces added to the sawhorse are the gussets. They're installed on the ends of the sawhorse to keep the legs from doing the splits when anything heavy is set on the top piece, see Fig. 9.

CUTTO FIT. I started making the gussets (D) by cutting them to rough size (7" wide x 10" long). Next, I cut a 10° bevel on one of the edges. This bevel lets the gusset fit tight against the bottom face of the top piece, see Fig. 9a. Then rip the opposite edge of the gusset to a finished width of 6".

Next, I "custom fit" the gussets to the sawhorse the same way that I cut the stretchers to fit the legs. First, I cut one end of the gusset to match the angle of the leg. Then I clamped the gusset in position and used the other leg to mark the length. Now just cut the gusset to length for an exact fit, see Fig 9. I used the finished gusset as a template to mark the second one.

CHAMFER EDGES. Here again, I finished work on the gussets by routing a 1/8" chamfer around the outer face to avoid splintering. But don't chamfer the beveled edge.

Finally, to complete the sawhorse, glue and screw both gussets in place, see Fig. 9b and Detail b at the top of page 28. ❑

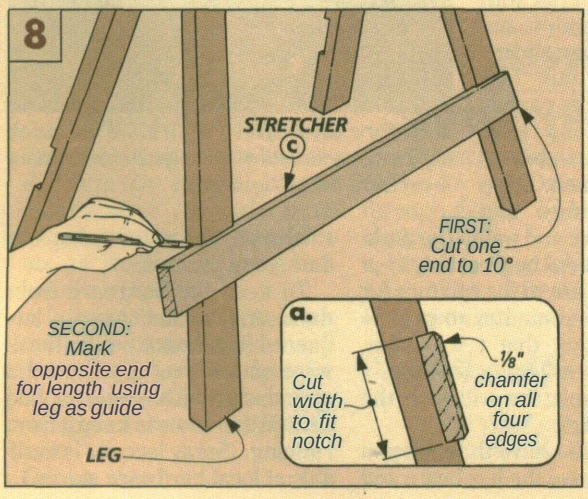

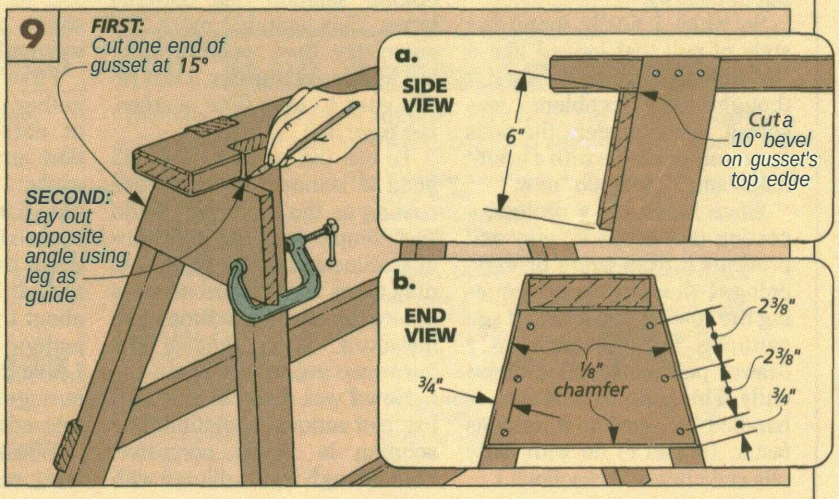

Talking Shop

CORNER CHISEL

• A corner chisel isn't something new. They've been used for years in the timber framing business to clean out deep mortises. But they're just too large for my woodworking needs.

Until I found a smaller version of these chisels. It's about 6" long and sized to fit a ¼" mortise. (It also works fine for mortises up to ½"-wide.) Perfect for the small mortises cut in the sideboard. (The one in the photo is made by Lie-Neilson Tools, see sources on page 31.)

This particular type of corner chisel starts out as a square piece of hardened tool steel. One end is ground to make two faces with a relief cut out of the middle, see photo. This creates a 90° cutting edge. Note: Other manufacturers make corner chisels ranging in size from ⅜" to 1".

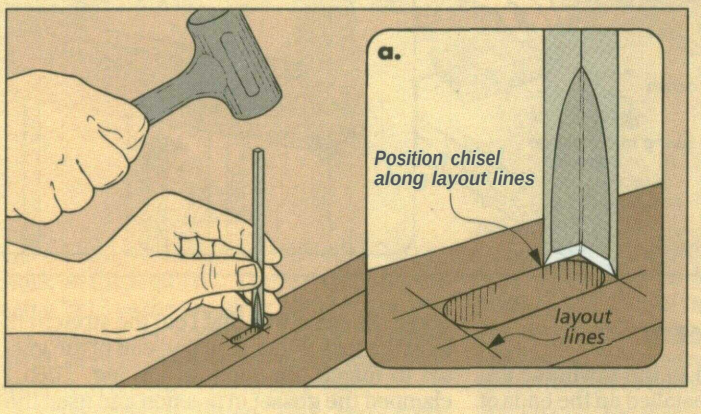

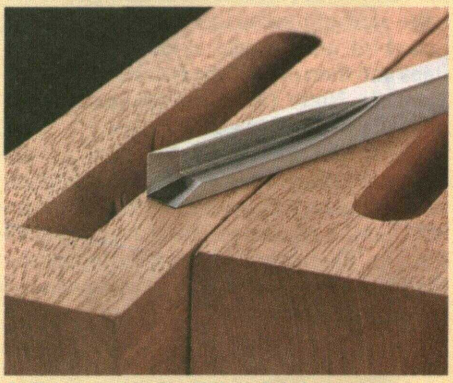

A ***Square ends.*** *Like driving a square peg in a round hole, this corner chisel squares up the rounded ends of a mortise.*

TECHNIQUE. The first step is to draw lay-out lines marking the location for the mortise. Next, use a drill bit to remove most of the waste. Finally, clean up the corners of the mortise with the corner chisel.

On small mortises (¼"-wide) I'll line up the chisel with the lay-out lines at each corner and remove the waste. And this works fine on soft woods. But on harder woods like oak or maple, it works better to alternate cuts between the two corners at one end, see drawing at left.

For larger mortises (up to ½" wide) I use a different approach. Instead of starting right on the lay-out lines, I take thin slices from the radius at each corner. That way the chisel can gradually pare away the wood until the corner is square.

ANTIQUING BRASS

• After building and finishing the classic sideboard on page 6, I encountered a small dilemma: picking drawer pulls. The style had to be just right. I wanted the hardware to have the classic feel of an antique — formal looking, but not showy.

So when I finally found the style of pull that looked like it "belonged" on the sideboard, I thought the problem was solved. Unfortunately, the pulls were only available with a bright finish and looked too "new."

Since brass has a protective coating that keeps it shiny and prevents it from aging or darkening, I thought about removing the coating and letting it age naturally. But the parts of a drawer pull are handled differently. The bail, for example, is handled the most so it darkens faster. (It has to do with body oils and chemical reactions.)

So the problem is the parts you touch end up a lot darker than the parts you don't touch. I was hoping the color would be a little more uniform.

That's when Dave, our store manager, told me about an antiquing solution that darkens brass. This sounded more like chemistry than woodworking, but he assured me that it was really easy to use. (For sources, see page 31.)

To use the solution, you still need to remove the protective coating on the hardware. To do that, simply soak the hardware in acetone or lacquer thinner. It only takes about three minutes before the coating is completely dissolved. Then remove the hardware and wipe it dry.

Now I was ready to mix up a batch of antiquing solution. The solution is mildly corrosive. Even though it gets diluted with water, it's still a good idea to cover your work area with a piece of plastic so a spill won't create a family crisis. It's also a good idea to protect your eyes with safety goggles and wear rubber gloves.

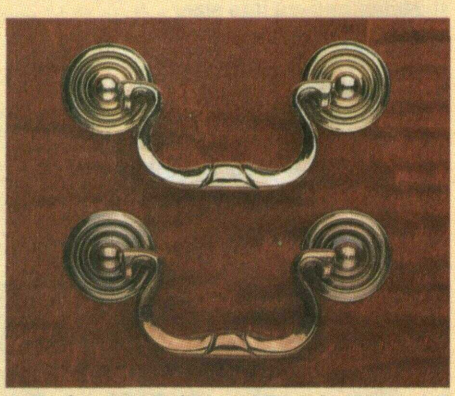

A ***Before and after.*** *All it takes is a quick dip in a special solution to give shiny brass hardware an antique look.*

First, mix together three capfuls of darkening solution in a pint of water. Then drop the hardware into the mixture and watch the darkening process begin. I only kept the hardware in the mixture for about three minutes to get the antique look that I was after. Leaving it in longer or using a stronger mixture will turn the brass darker.

When you have the look you want, remove the hardware and rinse it off with water to stop the darkening process.

To keep the hardware from darkening further, I put a lacquered finish back on the hardware once it was dry. I used a spray lacquer (Deft) and applied several thin coats to keep it from running. (Spray lacquer is available at local hardware stores.)

Sources

SIDEBOARD

A kit with all of the hardware needed to build the sideboard (shown on page 6) is available from *Woodsmith Project Supplies*. This kit includes all the woodscrews you'll need plus the following items:

- (4) Swan Neck Brass Pulls
- (8) 8-32 x 1¼" Machine Screws (for the pulls)

W97-797-100 Sideboard Hardware Kit.....$24.95

Note: Similar brass pulls are available from the sources below.

SLOT CUTTER BIT. To hold the bottom panel in the case and to keep the edging aligned around the top panel, I used a spline and groove joint. The groove can be cut on the table saw, but then long panels have to be run through on end. A safer way to cut the groove is to use a slot cutter bit on the router table.

To rout the grooves on the sideboard, I used a ¼" slot cutter bit, see sources below. But I should mention one thing. Most slot cutters cut a ½" deep groove. To get the bit to cut ⅜" deep, you can "bury" it in the router table fence like I did. Or you can replace the bearing on top of the bit with a larger one. (Most catalogs sell replacement bearings for their slot cutters.)

ANILINE DYE. The sideboard was stained with water-based aniline dyes. I used a mixture of two of J. E. Moser's Aniline Dye Stains, see sources below for these and other aniline dyes. I mixed up two parts of Natural Antique Cherry to one part of Bright Red Cherry and used about a pint of stain. (Test the color on a scrap board first.)

To apply the dye stain, I used a foam brush. And for large surfaces, a paint pad works well. For more on this, see page 12.

ANTIQUING THE BRASS PULLS. The pulls I chose for the sideboard were available in bright brass only. But I wanted them to look a bit older. So I darkened the brass. This is done in three simple steps, see page 30.

First I used lacquer thinner to remove the clear finish from the pulls. Next I dipped the pulls into a diluted concentration of a Brass Darkening Solution, see the sources below.

When the pulls had dulled sufficiently, I wanted to replace the clear coat of protection that was removed earlier. So I used a spray-lacquer that's available at local hardware stores.

VARNISHING

When I want a protective, high-gloss finish, I build up the finish with varnish and rub it out with pumice and rottenstone.

Many varnishes will do a good job, but the one I used was Behlen's 4-Hour Rubbing Varnish, see the sources below.

Besides the finish, you'll also need a number of supplies, most of which are available locally (or see the sources below).

Here's a list of most of the finishing supplies you'll need:

- China Bristle Brush
- Varnish
- Varnish Thinner (Naphtha or Mineral Spirits)
- Paper Strainer or Cheese Cloth
- 400 & 600-grit Wet/dry Sandpaper
- Tack Cloth
- Felt Blocks (2)
- 000 Pumice
- Rottenstone

VENEERING SUPPLIES

Veneering actually requires few supplies, see page 18. The first thing you need is the veneer.

Traditional wood veneers are readily available from a variety of sources, see below. The veneer we used on the sideboard was a curly maple veneer that we purchased from Certainly Wood. Note: Constantine's also sells flexible, paper-backed veneer in curly maple, see below.

Besides the veneer, you'll also need contact cement and a veneer roller. We used DAP's Weldwood contact cement that we found at a local hardware store. The rubber roller should also be available locally, though you can also find them in the catalogs listed below.

APOTHECARY CABINET

The only hardware needed for the apothecary cabinet on page 20 are some hardwood drawer pulls. These and similar wood pulls are available from the catalogs listed below.

FINISH. To finish the apothecary cabinet, I stained the case and the drawer pulls but left the drawer fronts natural for contrast. The stain I used was a rosewood gel stain made by Clearwater Color Company, see the sources below.

Finally, for a protective topcoat I added two coats of General Finishes' Royal Finish. It's available from *Woodsmith Project Supplies* as well as the sources listed below.

W97-4003-602 Royal Finish (Satin) .....$11.95 quart

CORNER CHISEL

Cleaning up mortises can take quite a bit of time, especially if there are a lot of them. For the twin mortises on the sideboard, I found that a ¼" corner chisel was pretty handy, see page 30.

The only problem is that small corner chisels aren't commonly available. But Lie-Nielsen Tools makes a ¼" corner chisel, and you can order one directly from them, see below.

WOODSMITH PROJECT SUPPLIES

ORDER BY MAIL

To order by mail, use the order form that comes with the current issue. The order form includes information on sales tax as well as shipping and handling charges.

If the mail order form is not available, please call our toll free number at the right for more information on specific charges and any applicable sales tax.

ORDER BY PHONE

For fastest service use our toll free order line. Open Monday through Friday, 7 AM to 7 PM Central Time.

Before calling, please have your VISA, MasterCard, or Discover Card ready.

1-800-444-7527

Note: Prices subject to change after April, 1995

MAIL ORDER SOURCES

Similar hardware and supplies may be found in the following catalogs. Please call each company for a catalog or information.

Garrett Wade
800–221–2942
Brass Pulls, Slot Cutter, Clearwater Stains, Rubbing Varnish, Finishing Supplies, Aniline Dyes

Van Dyke's Restorers
800–843–3320
Brass Darkening Solution, Veneer, Wood Pulls, Aniline Dyes

Certainly Wood
716–655–0206
Curly Maple Veneer

The Woodworkers' Store
800–279–4441
Brass & Wood Pulls, Slat Cutter, Veneer, Veneer Roller, General Finishes, Aniline Dyes

Constantine's
800–223–8087
Veneer, Veneer Roller, Paper-backed Veneer, Brass & Wood Pulls

The Woodsmith Store
515–255–8979
Brass Darkening Solution

Woodworker's Supply
800–645–9292
Moser's Aniline Dyes, Brass Putts, General Finishes, Slot Cutter, Clearwater Stains, Rubbing Varnish, Finishing Supplies

Cherry Tree **Toys**
800–848–4363
Wood Pulls

Lie-Nielsen Tools
800–327–2520
Corner Chisel

Final Details

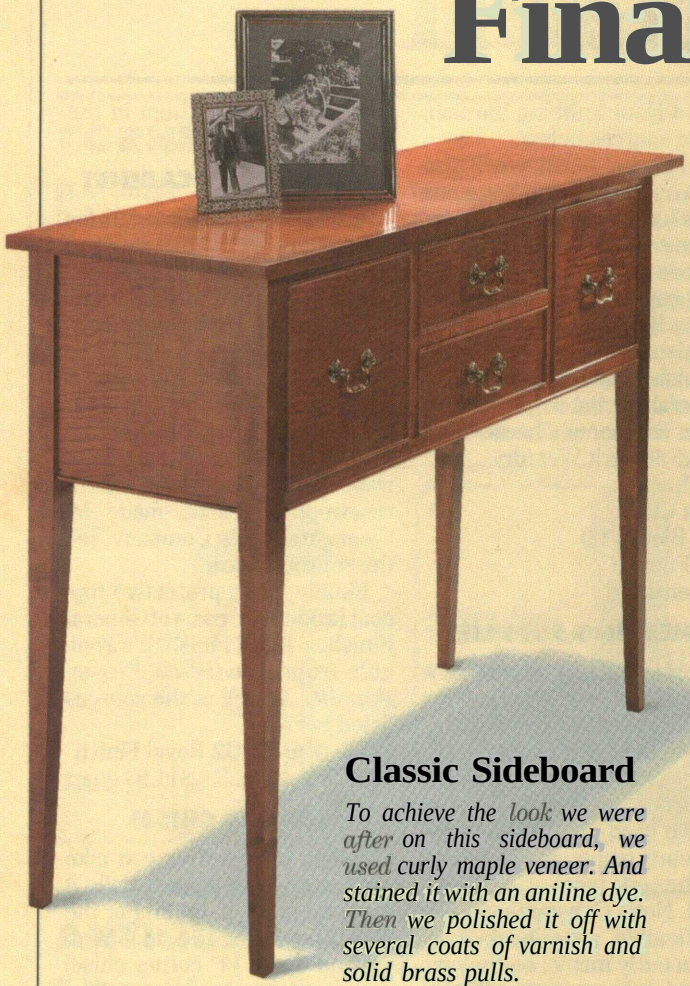

Classic Sideboard

To achieve the look we were after on this sideboard, we used curly maple veneer. And stained it with an aniline dye. Then we polished it off with several coats of varnish and solid brass pulls.

Apothecary Cabinet

A *To create subtle contrast in this apothecary cabinet, we stained the knobs and case but left the drawer fronts natural. Our simple step-by-step instructions begin on page 20.*

Sawhorses

A *Sawhorses must be sturdy and stable. So we angled the legs in two directions. And to add mechanical strength, we set them in notches. For easy-to-follow instructions, see page 26.*

Veneering

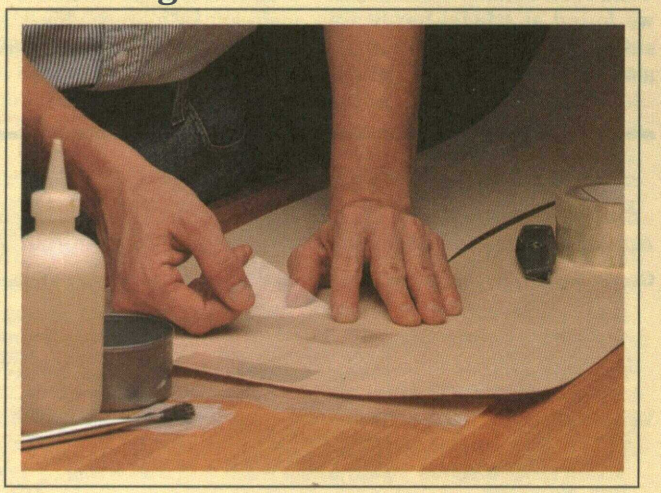

A *You can achieve perfect results every time without fancy tools or a shop full of clamps. On page 18 we show you how to use traditional veneers on your next heirloom project.*